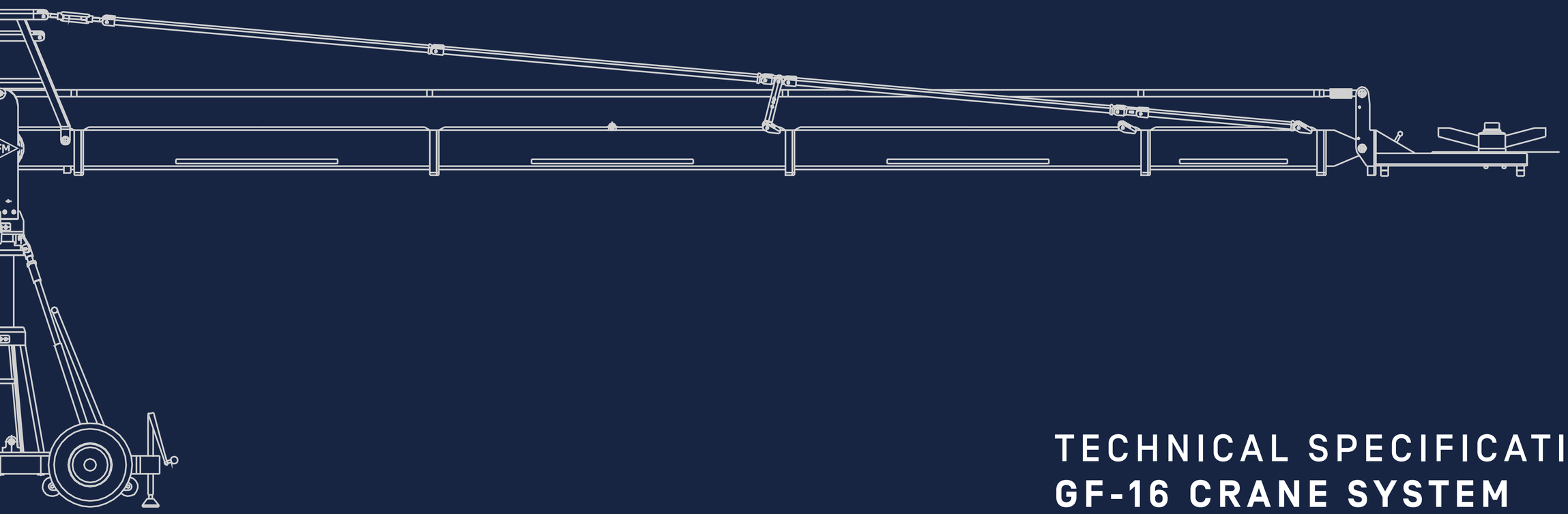

TECHNICAL SPECIFICATIONS — GF-16 CRANE SYSTEM

#		Max. Euro-adapter height / Max. Mitchell plate height	Lift range	Arm reach	Length of rear end	Front extensions	Rear extensions	Lift capacity (working load)	Counterweight required for max. lift capacity	Crane & base dolly weight excluding counterweight
V1		424 cm / 13' 11"	420 cm / 13' 9"	336 cm / 11'	279 cm / 9' 2"	1 x 200 cm / 6' 7"	1 x 192 cm / 6' 4"	250 kg / 551 lbs	274 kg / 604 lbs	661 kg / 1457 lbs
V2		502 cm / 16' 5"	576 cm / 18' 11"	434 cm / 14' 3"	279 cm / 9' 2"	1 x 200 cm / 6' 7" + 1 x 100 cm / 3' 3"	1 x 192 cm / 6' 4"	250 kg / 551 lbs	424 kg / 935 lbs	678 kg / 1495 lbs
V3		581 cm / 19' 1"	735 cm / 24' 1"	534 cm / 17' 6"	279 cm / 9' 2"	2 x 200 cm / 6' 7"	1 x 192 cm / 6' 4"	250 kg / 551 lbs	554 kg / 1221 lbs	730 kg / 1610 lbs
V4		659 cm / 21' 7"	891 cm / 29' 3"	632 cm / 20' 9"	279 cm / 9' 2"	2 x 200 cm / 6' 7" + 1 x 100 cm / 3' 3"	1 x 192 cm / 6' 4"	250 kg / 551 lbs	718 kg / 1583 lbs	747 kg / 1648 lbs
V5		738 cm / 24' 3"	1050 cm / 34' 5"	732 cm / 24'	279 cm / 9' 2"	3 x 200 cm / 6' 7"	1 x 192 cm / 6' 4"	250 kg / 551 lbs	896 kg / 1975 lbs	769 kg / 1696 lbs
V6		816 cm / 26' 9"	1205 cm / 39' 6"	830 cm / 27' 3"	279 cm / 9' 2"	3 x 200 cm / 6' 7" + 1 x 100 cm / 3' 3"	1 x 192 cm / 6' 4"	250 kg / 551 lbs	1078 kg / 2377 lbs	802 kg / 1768 lbs
V7		896 cm / 29' 5"	1364 cm / 44' 9"	930 cm / 30' 6"	279 cm / 9' 2"	4 x 200 cm / 6' 7"	1 x 192 cm / 6' 4"	250 kg / 551 lbs	1274 kg / 2809 lbs	841 kg / 1853 lbs
V8		974 cm / 31' 11"	1520 cm / 49' 10"	1028 cm / 33' 9"	279 cm / 9' 2"	4 x 200 cm / 6' 7" + 1 x 100 cm / 3' 3"	1 x 192 cm / 6' 4"	140 kg / 309 lbs	1022 kg / 2253 lbs	835 kg / 1840 lbs
V9		1053 cm / 34' 7"	1679 cm / 55' 1"	1128 cm / 37'	279 cm / 9' 2"	5 x 200 cm / 6' 7"	1 x 192 cm / 6' 4"	140 kg / 309 lbs	1166 kg / 2571 lbs	876 kg / 1931 lbs
V10		1131 cm / 37' 1"	1835 cm / 60' 2"	1225 cm / 40' 2"	279 cm / 9' 2"	5 x 200 cm / 6' 7" + 1 x 100 cm / 3' 3"	1 x 192 cm / 6' 4"	130 kg / 287 lbs	1330 kg / 2932 lbs	893 kg / 1968 lbs
V11		1217 cm / 39' 11"	1955 cm / 64' 2"	1286 cm / 42' 2"	279 cm / 9' 2"	5 x 200 cm / 6' 7" + 1 x 200 cm / 6' 7" conical	1 x 192 cm / 6' 4"	85 kg / 187 lbs	974 kg / 2147 lbs	846 kg / 1865 lbs
V12		1295 cm / 42' 6"	2110 cm / 69' 3"	1384 cm / 45' 5"	279 cm / 9' 2"	5 x 200 cm / 6' 7" + 1 x 100 cm / 3' 3" + 1 x 200 cm / 6' 7" conical	1 x 192 cm / 6' 4"	85 kg / 187 lbs	1134 kg / 2500 lbs	882 kg / 1945 lbs
V13		1374 cm / 45' 1"	2269 cm / 74' 5"	1484 cm / 48' 8"	279 cm / 9' 2"	6 x 200 cm / 6' 7" + 1 x 200 cm / 6' 7" conical	1 x 192 cm / 6' 4"	80 kg / 176 lbs	1218 kg / 2685 lbs	895 kg / 1973 lbs
V14		1452 cm / 47' 8"	2425 cm / 79' 7"	1582 cm / 51' 11"	279 cm / 9' 2"	6 x 200 cm / 6' 7" + 1 x 100 cm / 3' 3" + 1 x 200 cm / 6' 7" conical	1 x 192 cm / 6' 4"	80 kg / 176 lbs	1394 kg / 3073 lbs	915 kg / 2017 lbs
V15		1532 cm / 50' 3"	2584 cm / 84' 9"	1682 cm / 55' 2"	279 cm / 9' 2"	7 x 200 cm / 6' 7" + 1 x 200 cm / 6' 7" conical	1 x 192 cm / 6' 4"	60 kg / 132 lbs	1362 kg / 3003 lbs	927 kg / 2043 lbs

PLATFORM
(2 PERSON)

PLATFORM
(1 PERSON)

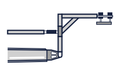

REMOTE OPERATION

CRANE MEASUREMENTS
(WITH DOLLY)

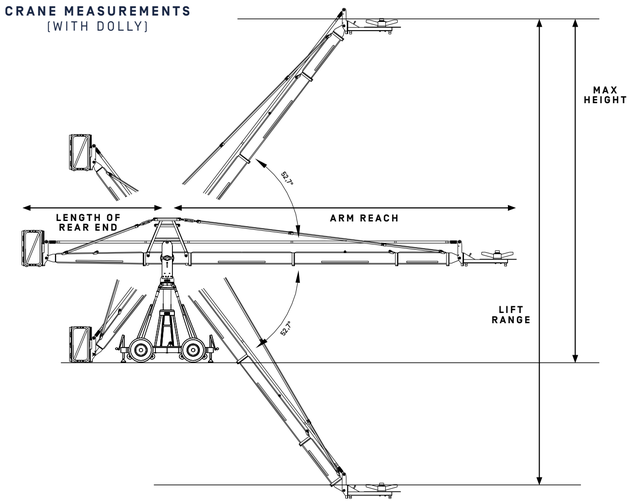

DOLLY DIMENSIONS (IN MM)
(IDENTICAL FOR ALL DOLLY VERSIONS)

WEIGHT – 244 kg / 538 lbs

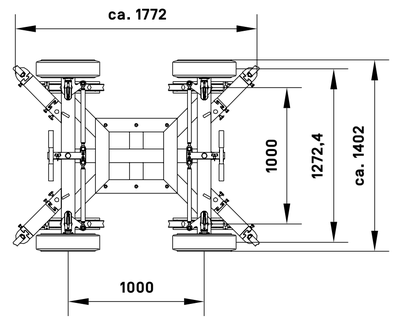

Please note: *Technical specifications are subject to change without notice.*

V1

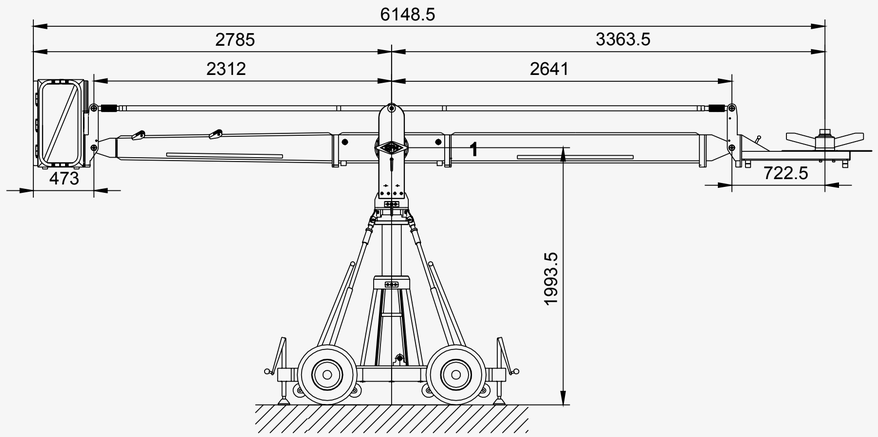

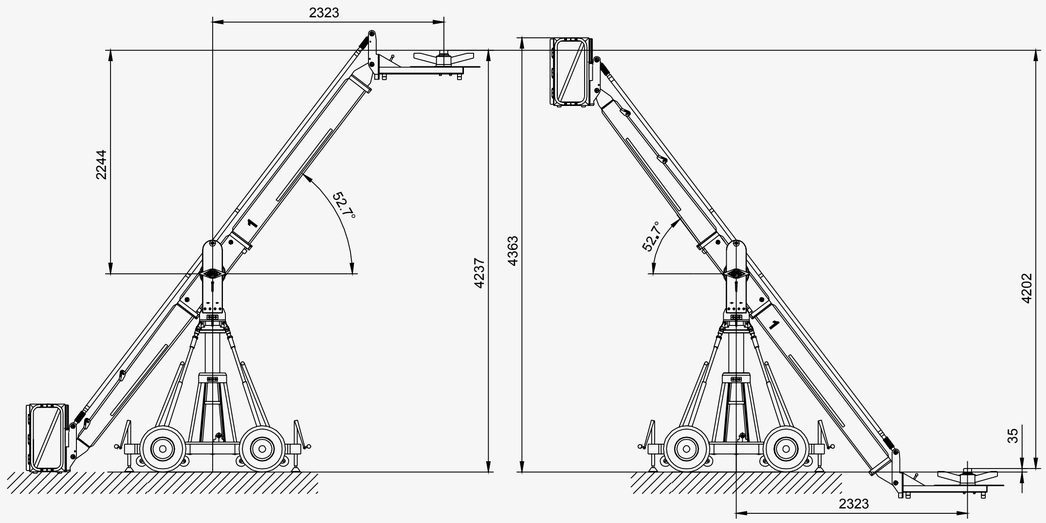

FRONT EXTENSIONS
1 x 200 cm / 6' 7"

REAR EXTENSIONS
1 x 192 cm / 6' 4"

MAX HEIGHT
424 cm / 13' 11"

LIFT RANGE
420 cm / 13' 9"

ARM REACH
336 cm / 11'

LENGTH OF REAR END
279 cm / 9' 2"

PIVOT HEIGHT
199 cm / 6' 6"

LIFT CAPACITY
250 kg / 551 lbs

COUNTERWEIGHT REQUIRED
TO BALANCE EMPTY ARM
8 kg / 18 lbs
FOR MAX LIFT CAPACITY
274 kg / 604 lbs

CRANE & BASE DOLLY WEIGHT
[EXCL. COUNTERWEIGHT]
661 kg / 1457 lbs

Measurements in mm, unless otherwise specified

Please note: *Technical specifications are subject to change without notice.*

V 2

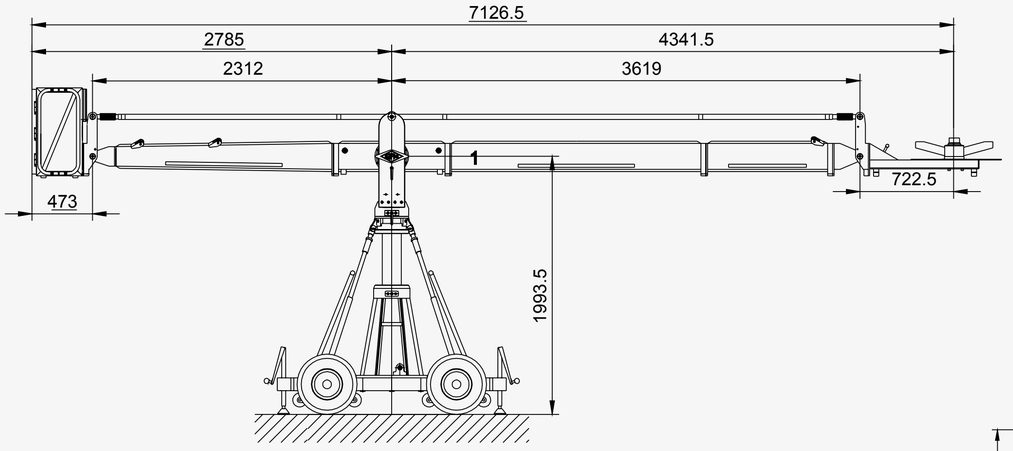

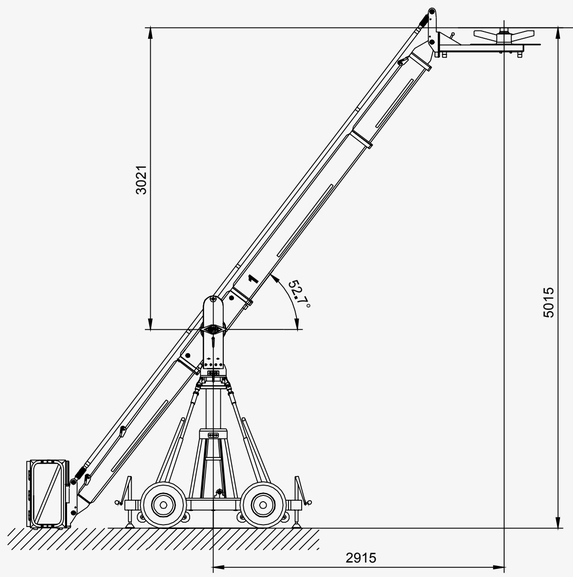

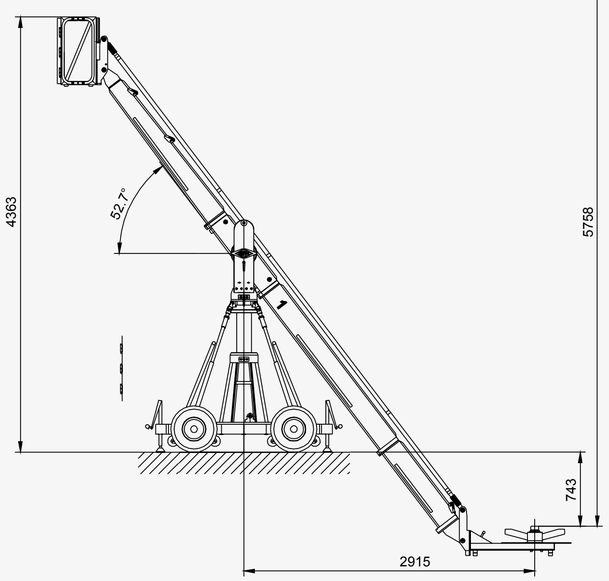

FRONT EXTENSIONS
1 x 200 cm / 6' 7" + 1 x 100 cm / 3' 3"

REAR EXTENSIONS
1 x 192 cm / 6' 4"

MAX HEIGHT
502 cm / 16' 5"

LIFT RANGE
576 cm / 18' 11"

ARM REACH
434 cm / 14' 3"

LENGTH OF REAR END
279 cm / 9' 2"

PIVOT HEIGHT
199 cm / 6' 6"

LIFT CAPACITY
250 kg / 551 lbs

COUNTERWEIGHT REQUIRED
TO BALANCE EMPTY ARM
36 kg / 79 lbs
FOR MAX LIFT CAPACITY
424 kg / 935 lbs

CRANE & BASE DOLLY WEIGHT
(EXCL. COUNTERWEIGHT)
678 kg / 1495 lbs

Measurements in mm, unless otherwise specified

Please note: *Technical specifications are subject to change without notice.*

V 3

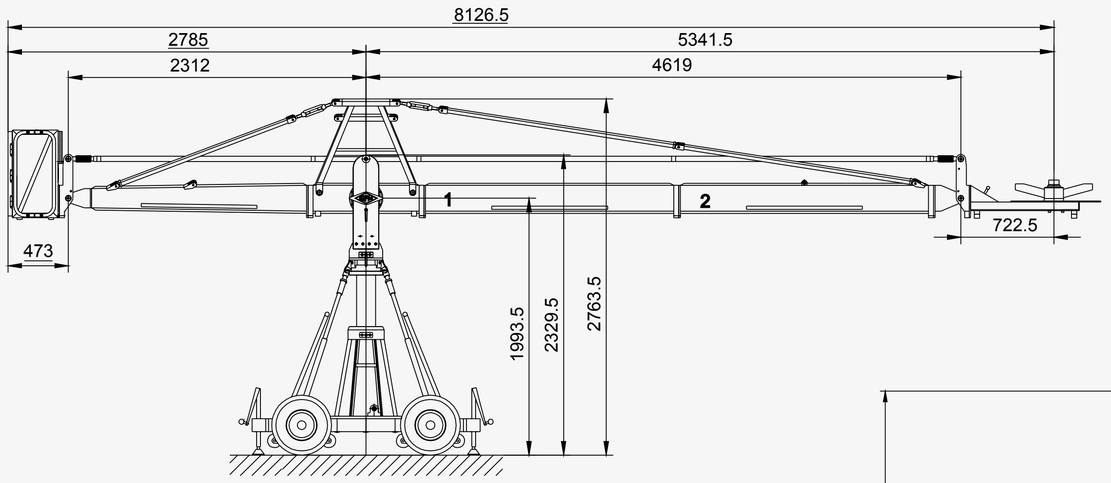

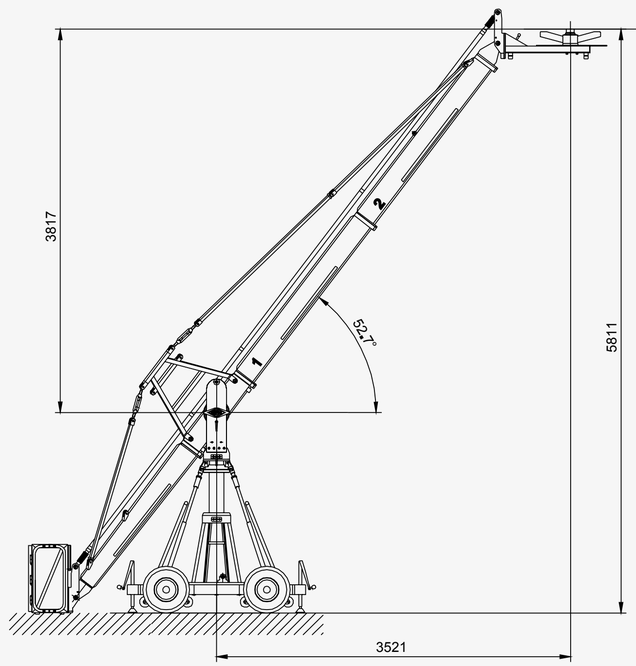

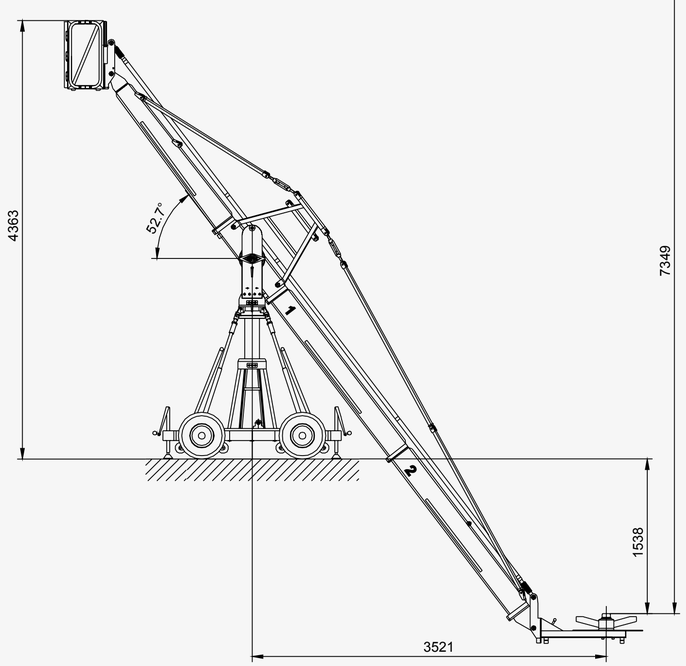

FRONT EXTENSIONS
2 x 200 cm / 6' 7"

REAR EXTENSIONS
1 x 192 cm / 6' 4"

MAX HEIGHT
581 cm / 19' 1"

LIFT RANGE
735 cm / 24' 1"

ARM REACH
534 cm / 17' 6"

LENGTH OF REAR END
279 cm / 9' 2"

PIVOT HEIGHT
199 cm / 6' 6"

LIFT CAPACITY
250 kg / 551 lbs

COUNTERWEIGHT REQUIRED
TO BALANCE EMPTY ARM
56 kg / 123 lbs
FOR MAX LIFT CAPACITY
554 kg / 1221 lbs

CRANE & BASE DOLLY WEIGHT
[EXCL. COUNTERWEIGHT]
730 kg / 1610 lbs

Measurements in mm, unless otherwise specified

Please note: *Technical specifications are subject to change without notice.*

V 4

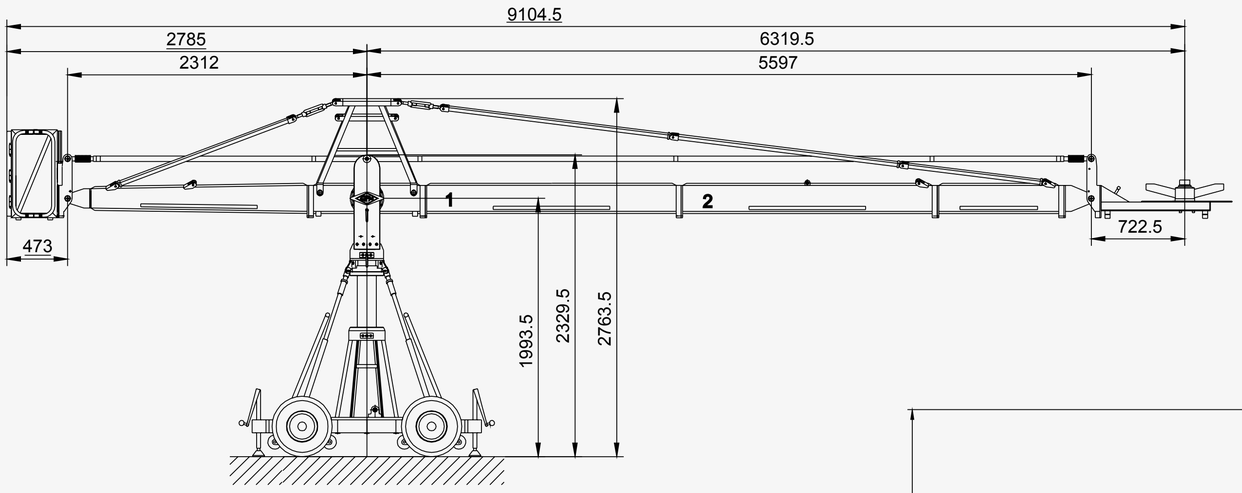

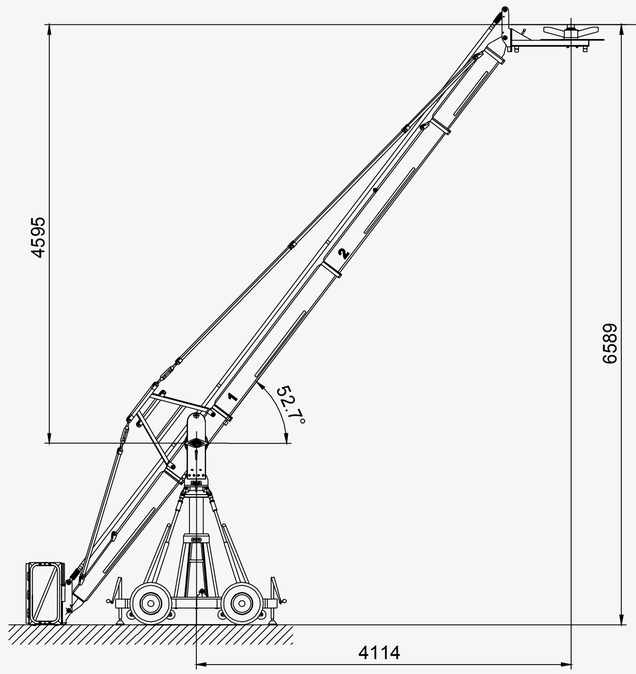

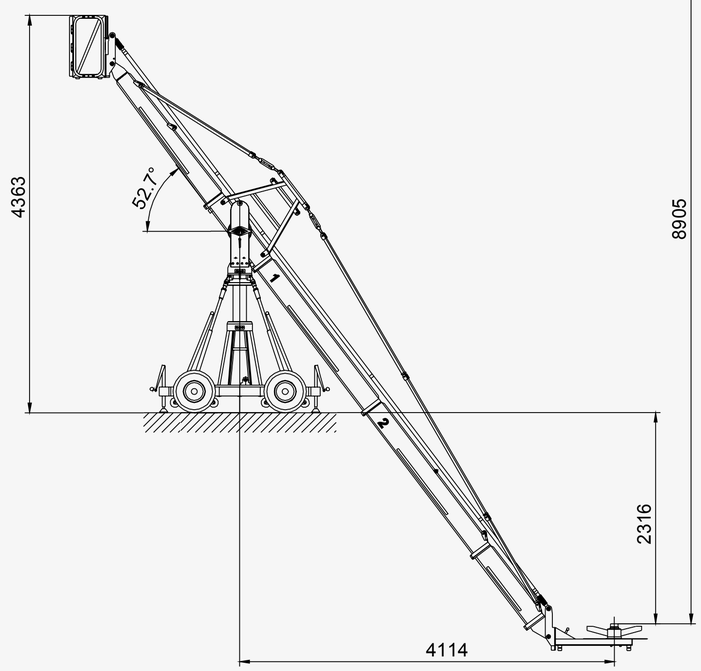

FRONT EXTENSIONS
2 x 200 cm / 6' 7" + 1 x 100 cm / 3' 3"

REAR EXTENSIONS
1 x 192 cm / 6' 4"

MAX HEIGHT
659 cm / 21' 7"

LIFT RANGE
891 cm / 29' 3"

ARM REACH
632 cm / 20' 9"

LENGTH OF REAR END
279 cm / 9' 2"

PIVOT HEIGHT
199 cm / 6' 6"

LIFT CAPACITY
250 kg / 551 lbs

COUNTERWEIGHT REQUIRED
TO BALANCE EMPTY ARM
112 kg / 247 lbs
FOR MAX LIFT CAPACITY
718 kg / 1583 lbs

CRANE & BASE DOLLY WEIGHT
[EXCL. COUNTERWEIGHT]
747 kg / 1648 lbs

Measurements in mm, unless otherwise specified

Please Note: Technical specifications are subject to change without notice.

V 5

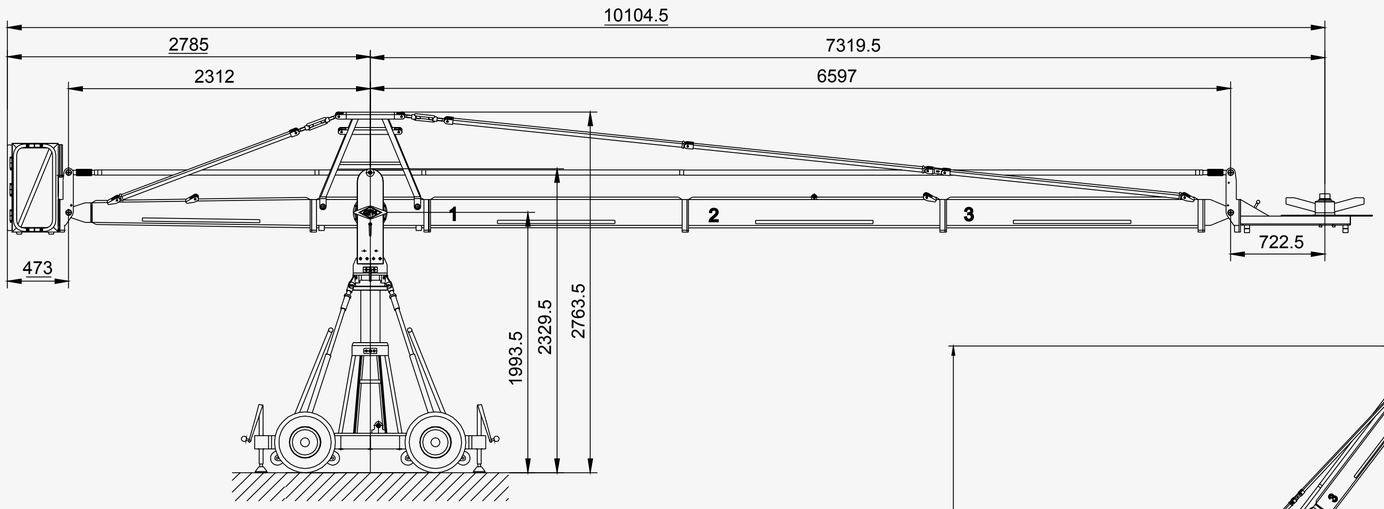

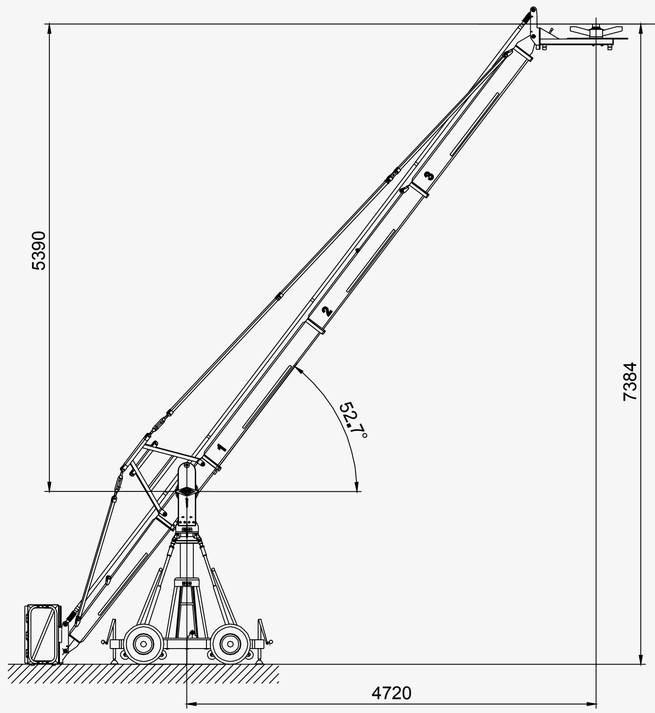

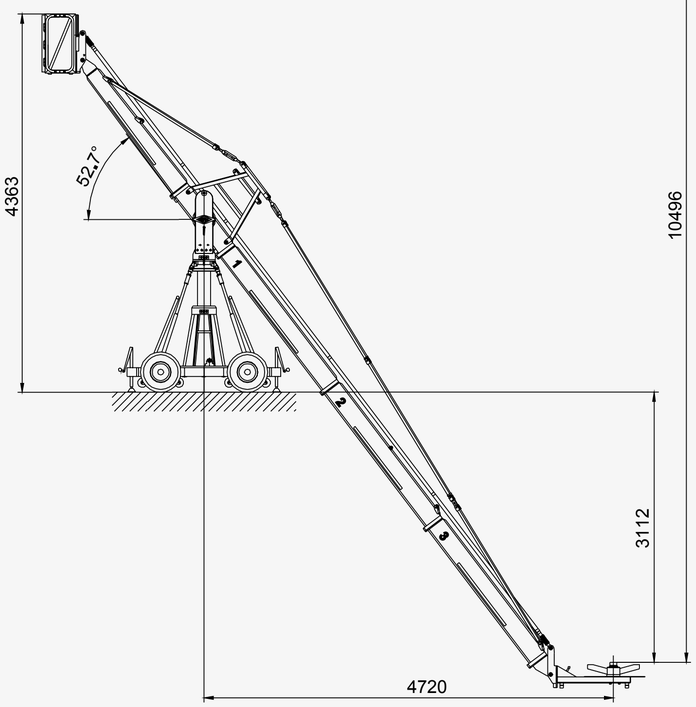

FRONT EXTENSIONS
3 x 200 cm / 6' 7"

REAR EXTENSIONS
1 x 192 cm / 6' 4"

MAX HEIGHT
738 cm / 24' 3"

LIFT RANGE
1050 cm / 34' 5"

ARM REACH
732 cm / 24'

LENGTH OF REAR END
279 cm / 9' 2"

PIVOT HEIGHT
199 cm / 6' 6"

LIFT CAPACITY
250 kg / 551 lbs

COUNTERWEIGHT REQUIRED
TO BALANCE EMPTY ARM
182 kg / 401 lbs
FOR MAX LIFT CAPACITY
896 kg / 1975 lbs

CRANE & BASE DOLLY WEIGHT
(EXCL. COUNTERWEIGHT)
769 kg / 1696 lbs

Measurements in mm, unless otherwise specified

Please note: *Technical specifications are subject to change without notice.*

V 6

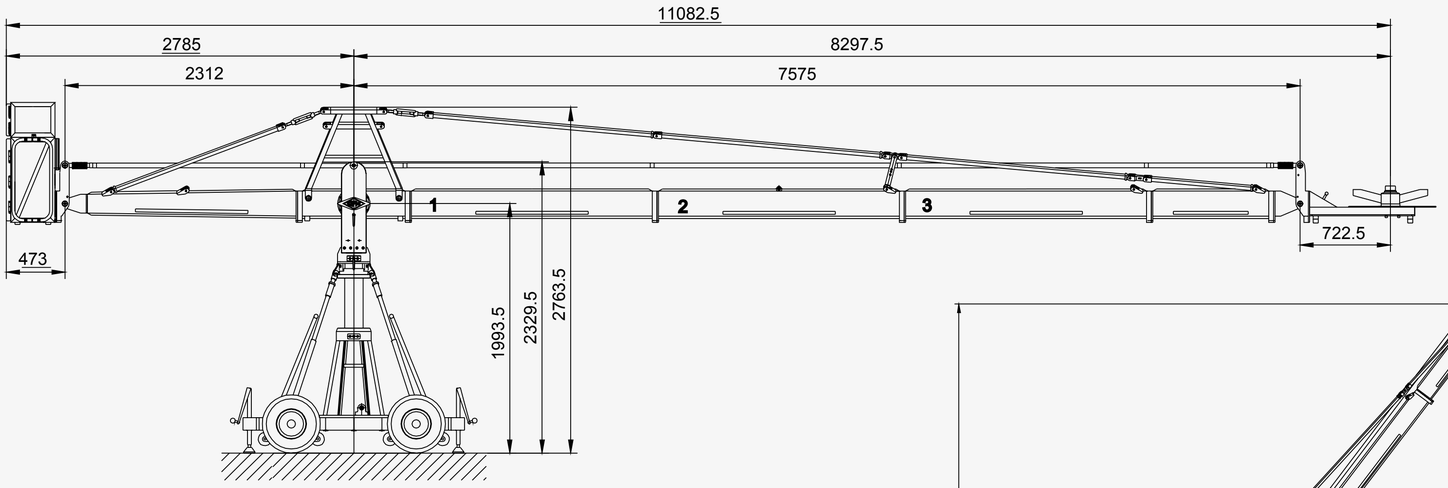

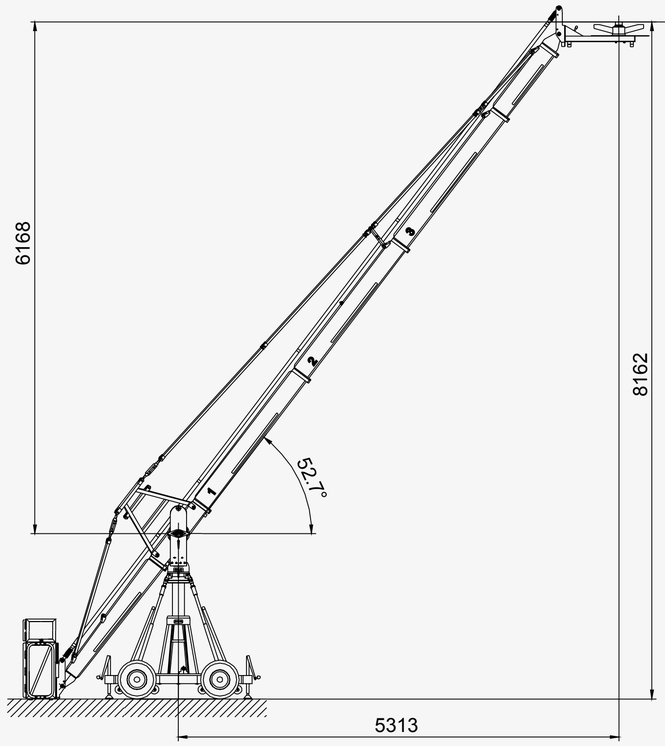

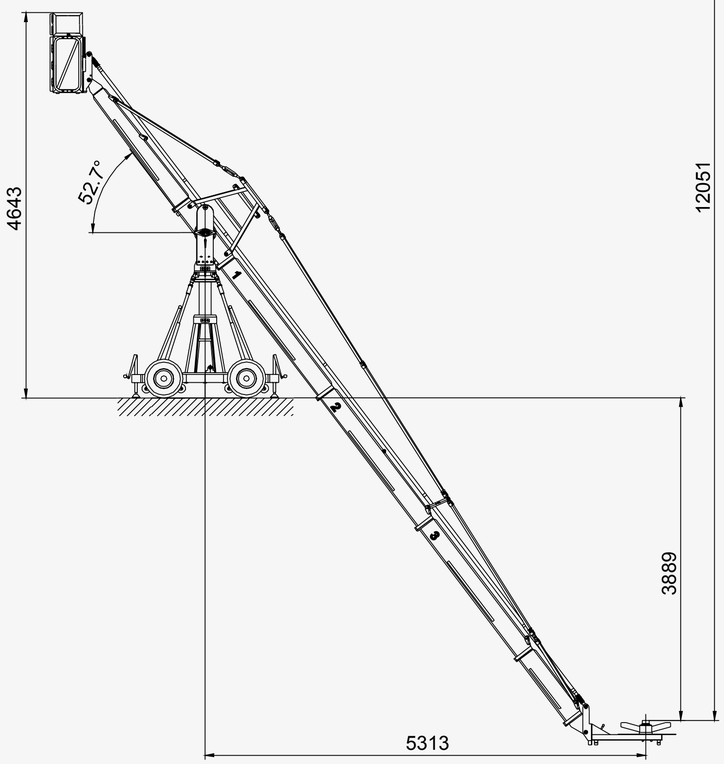

FRONT EXTENSIONS
3 x 200 cm / 6' 7" + 1 x 100 cm / 3' 3"

REAR EXTENSIONS
1 x 192 cm / 6' 4"

MAX HEIGHT
816 cm / 26' 9"

LIFT RANGE
1205 cm / 39' 6"

ARM REACH
830 cm / 27' 3"

LENGTH OF REAR END
279 cm / 9' 2"

PIVOT HEIGHT
199 cm / 6' 6"

LIFT CAPACITY
250 kg / 551 lbs

COUNTERWEIGHT REQUIRED
TO BALANCE EMPTY ARM
266 kg / 586 lbs
FOR MAX LIFT CAPACITY
1078 kg / 2377 lbs

CRANE & BASE DOLLY WEIGHT
(EXCL. COUNTERWEIGHT)
802 kg / 1768 lbs

Measurements in mm, unless otherwise specified

Please note: *Technical specifications are subject to change without notice.*

V7

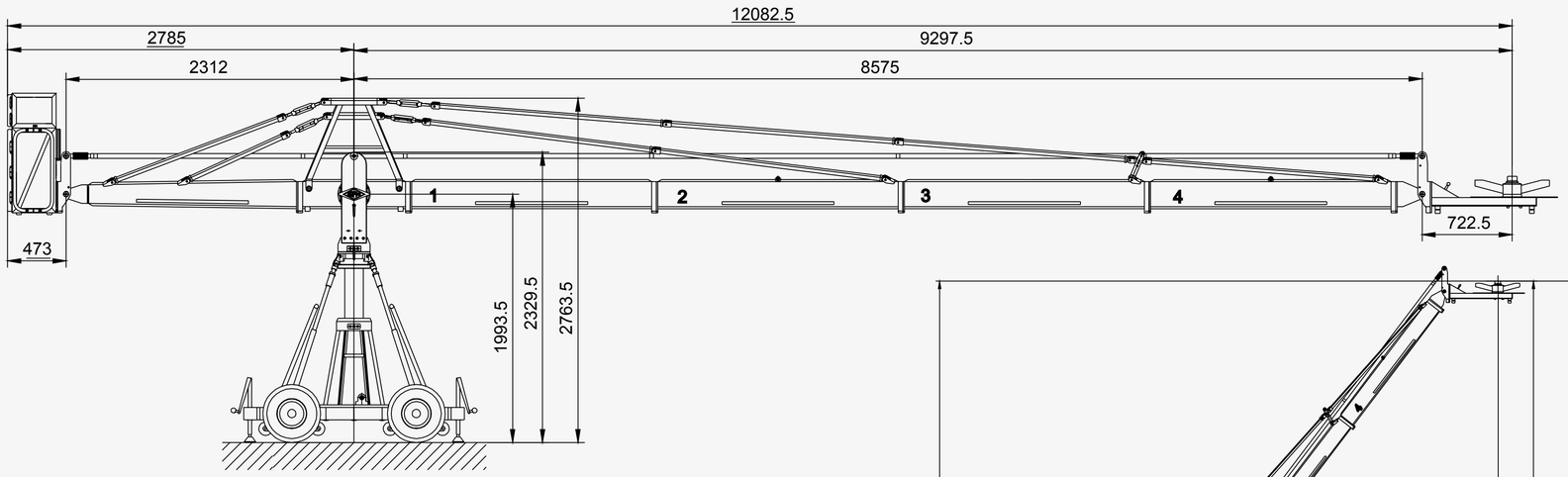

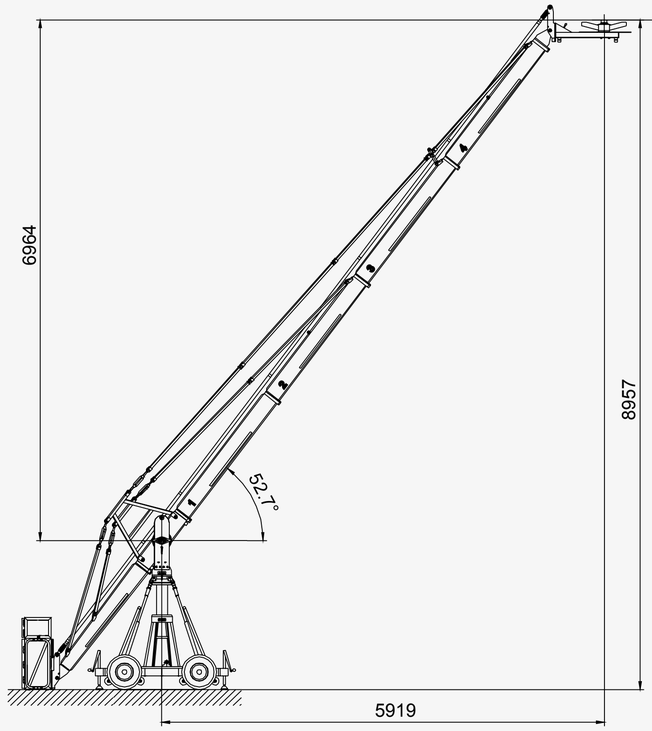

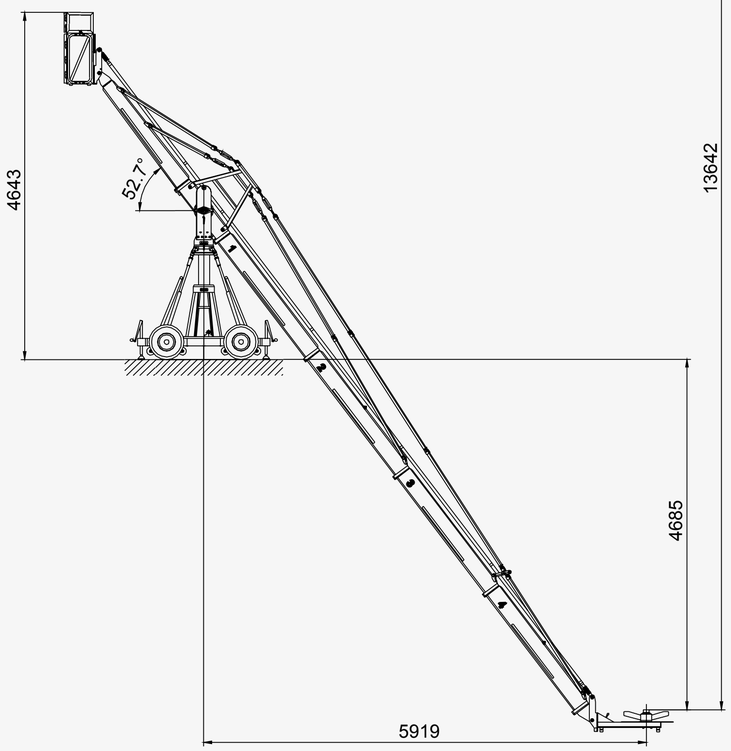

FRONT EXTENSIONS
4 x 200 cm / 6' 7"

REAR EXTENSIONS
1 x 192 cm / 6' 4"

MAX HEIGHT
896 cm / 29' 5"

LIFT RANGE
1364 cm / 44' 9"

ARM REACH
930 cm / 30' 6"

LENGTH OF REAR END
279 cm / 9' 2"

PIVOT HEIGHT
199 cm / 6' 6"

LIFT CAPACITY
250 kg / 551 lbs

COUNTERWEIGHT REQUIRED
TO BALANCE EMPTY ARM
372 kg / 820 lbs
FOR MAX LIFT CAPACITY
1274 kg / 2809 lbs

CRANE & BASE DOLLY WEIGHT
[EXCL. COUNTERWEIGHT]
841 kg / 1853 lbs

Measurements in mm, unless otherwise specified

Please note: *Technical specifications are subject to change without notice.*

V 8

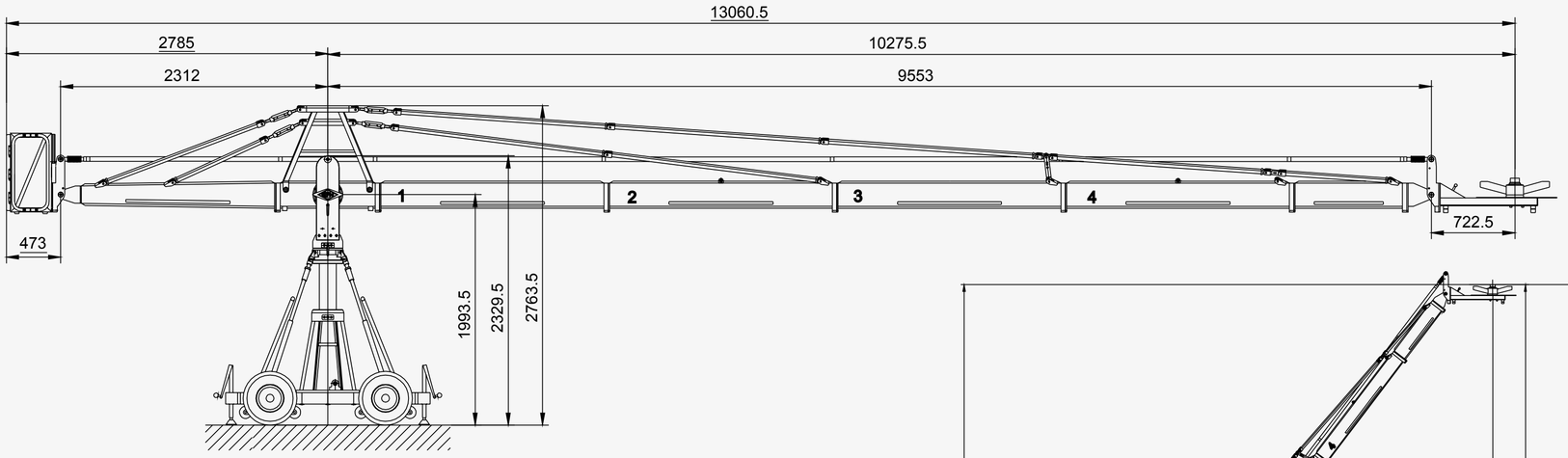

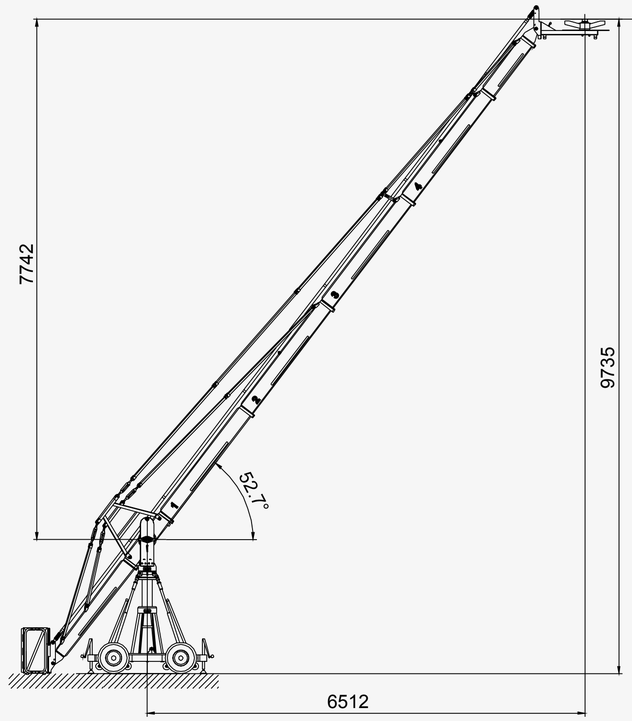

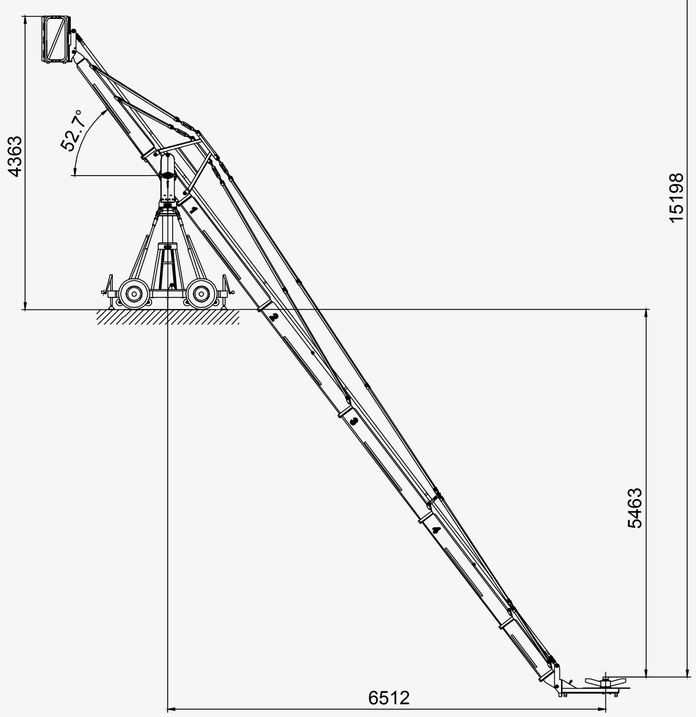

FRONT EXTENSIONS
4 x 200 cm / 6' 7" + 1 x 100 cm / 3' 3"

REAR EXTENSIONS
1 x 192 cm / 6' 4"

MAX HEIGHT
974 cm / 31' 11"

LIFT RANGE
1520 cm / 49' 10"

ARM REACH
1028 cm / 33' 9"

LENGTH OF REAR END
279 cm / 9' 2"

PIVOT HEIGHT
199 cm / 6' 6"

LIFT CAPACITY
140 kg / 309 lbs

COUNTERWEIGHT REQUIRED
TO BALANCE EMPTY ARM
448 kg / 988 lbs
FOR MAX LIFT CAPACITY
1022 kg / 2253 lbs

CRANE & BASE DOLLY WEIGHT
(EXCL. COUNTERWEIGHT)
835 kg / 1840 lbs

Measurements in mm, unless otherwise specified

Please note: *Technical specifications are subject to change without notice.*

V 9

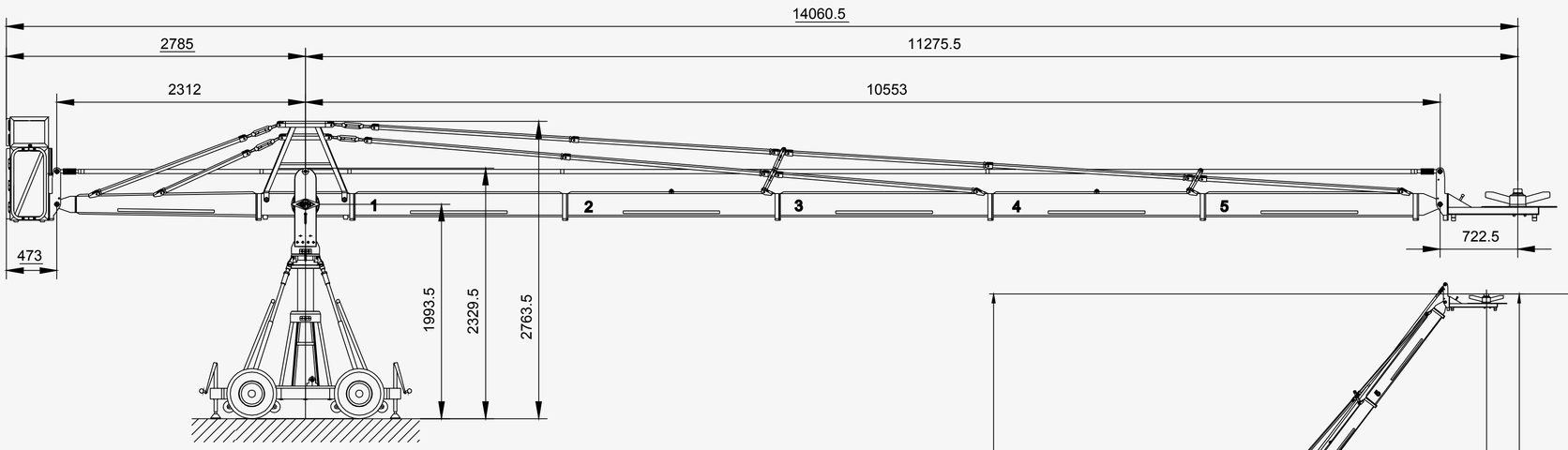

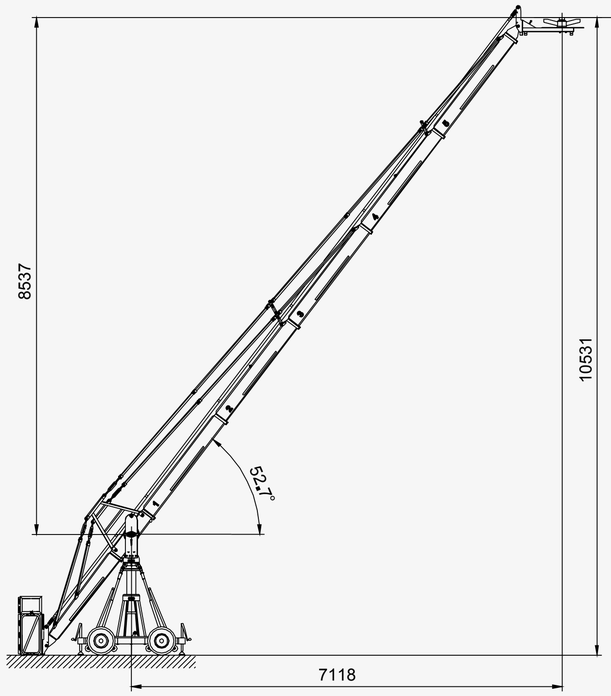

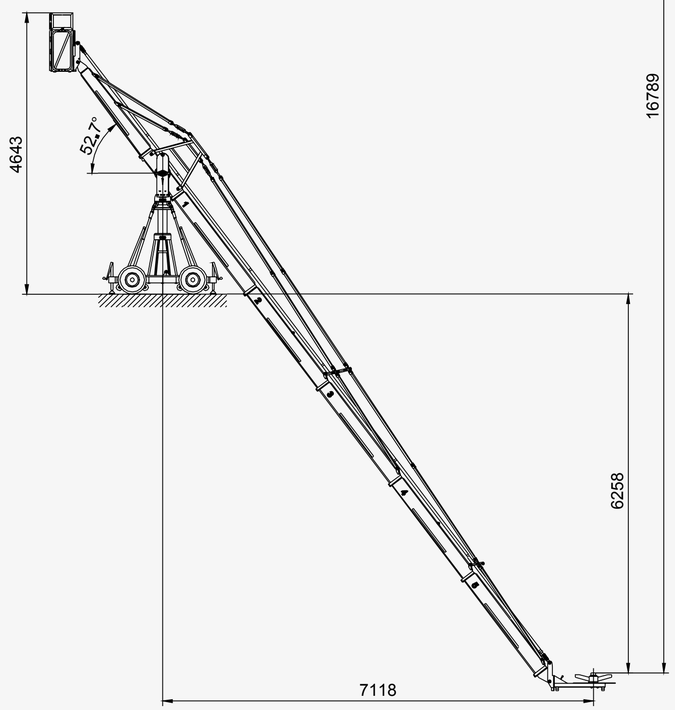

FRONT EXTENSIONS
5 x 200 cm / 6' 7"

REAR EXTENSIONS
1 x 192 cm / 6' 4"

MAX HEIGHT
1053 cm / 34' 7"

LIFT RANGE
1679 cm / 55' 1"

ARM REACH
1128 cm / 37'

LENGTH OF REAR END
279 cm / 9' 2"

PIVOT HEIGHT
199 cm / 6' 6"

LIFT CAPACITY
140 kg / 309 lbs

COUNTERWEIGHT REQUIRED
TO BALANCE EMPTY ARM
554 kg / 1221 lbs
FOR MAX LIFT CAPACITY
1166 kg / 2571 lbs

CRANE & BASE DOLLY WEIGHT
[EXCL. COUNTERWEIGHT]
876 kg / 1931 lbs

Measurements in mm, unless otherwise specified

Please note: *Technical specifications are subject to change without notice.*

V10

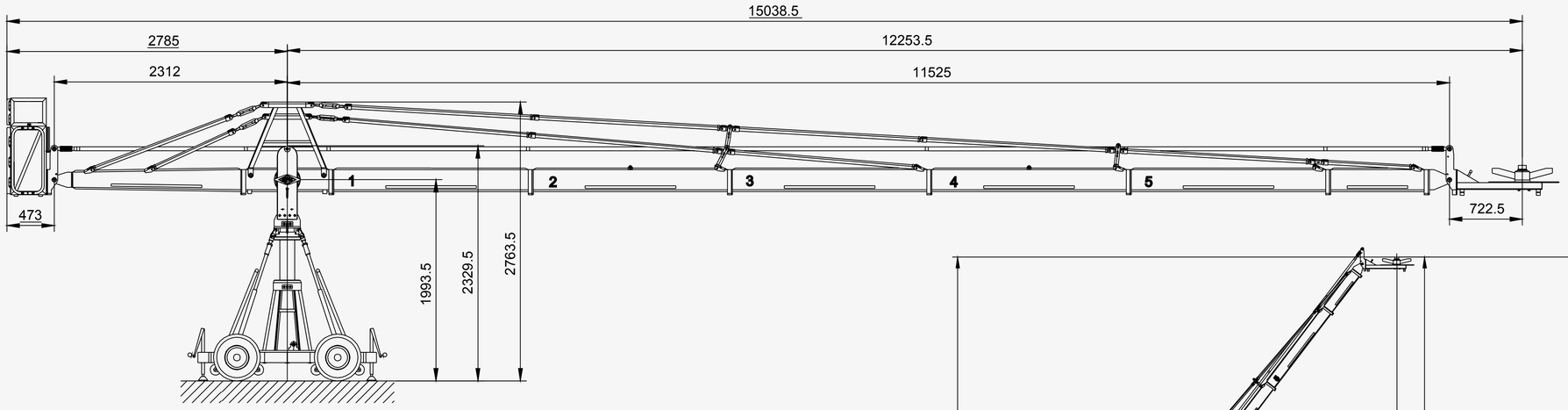

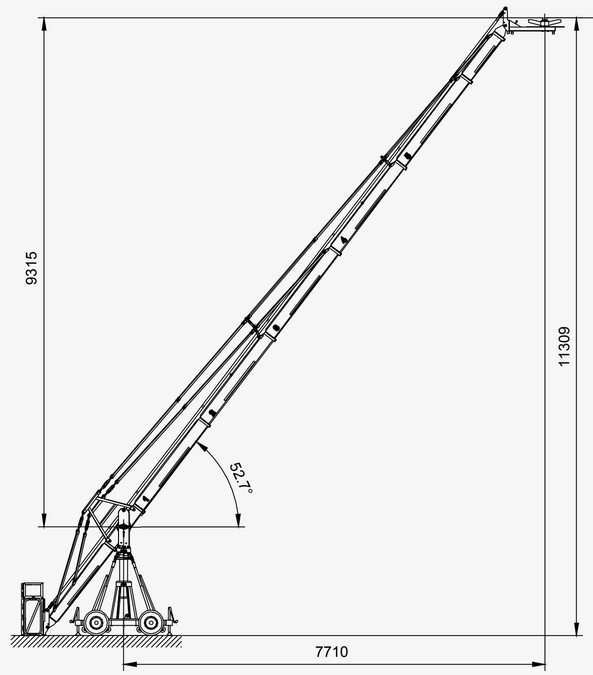

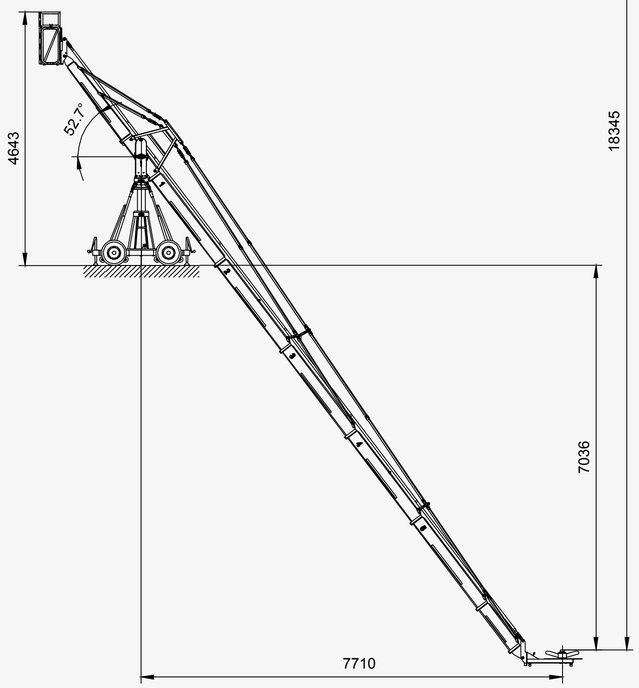

FRONT EXTENSIONS
5 x 200 cm / 6' 7" + 1 x 100 cm / 3' 3"

REAR EXTENSIONS
1 x 192 cm / 6' 4"

MAX HEIGHT
1131 cm / 37' 1"

LIFT RANGE
1835 cm / 60' 2"

ARM REACH
1225 cm / 40' 2"

LENGTH OF REAR END
279 cm / 9' 2"

PIVOT HEIGHT
199 cm / 6' 6"

LIFT CAPACITY
130 kg / 287 lbs

COUNTERWEIGHT REQUIRED
TO BALANCE EMPTY ARM
658 kg / 1451 lbs
FOR MAX LIFT CAPACITY
1330 kg / 2932 lbs

CRANE & BASE DOLLY WEIGHT
[EXCL. COUNTERWEIGHT]
893 kg / 1968 lbs

Measurements in mm, unless otherwise specified

Please note: *Technical specifications are subject to change without notice.*

V11

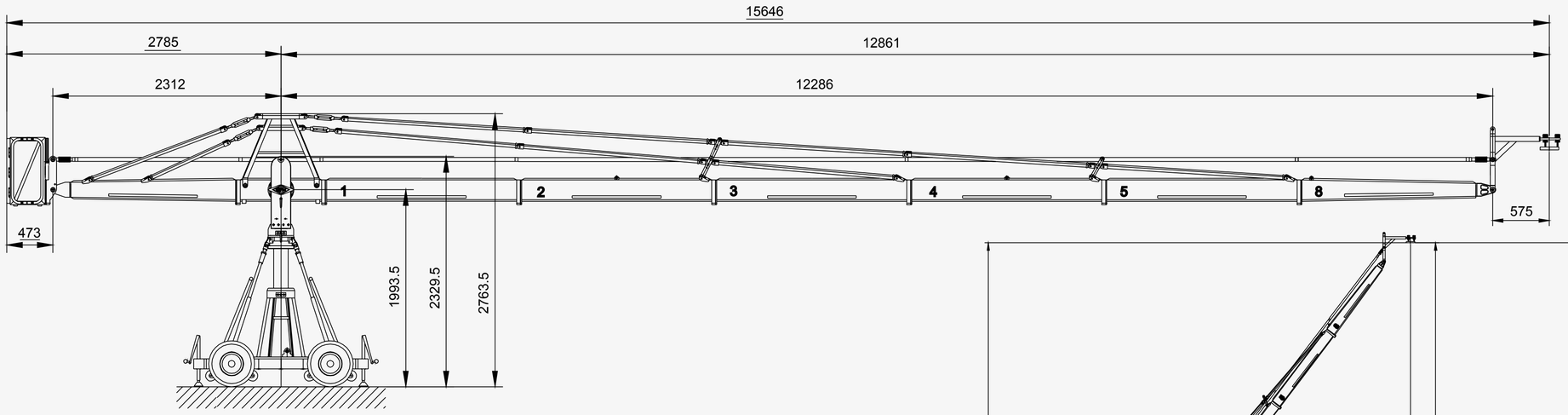

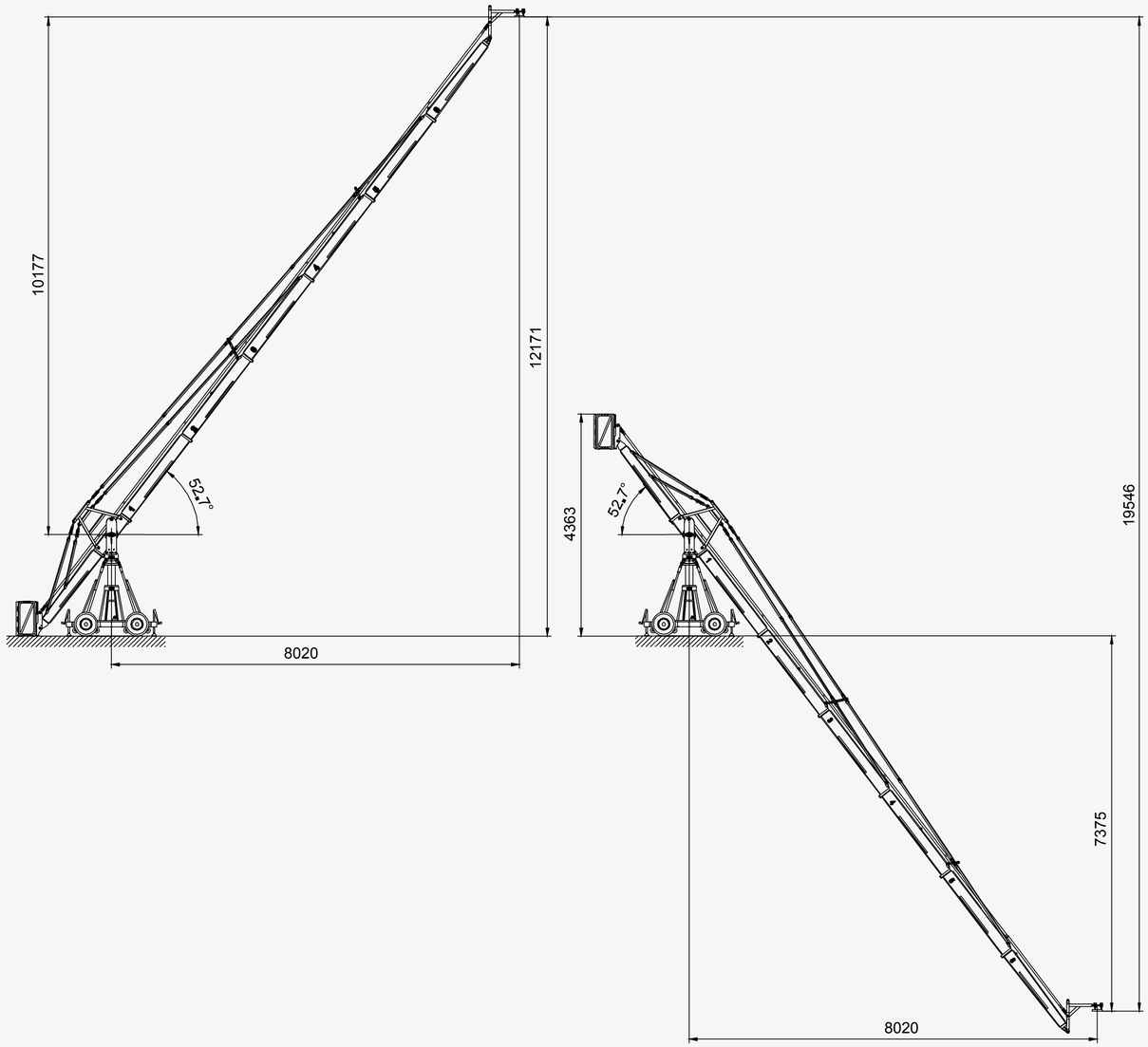

FRONT EXTENSIONS
5 x 200 cm / 6' 7" + 1 x 200 cm / 6' 7" conical

REAR EXTENSIONS
1 x 192 cm / 6' 4"

MAX HEIGHT
1217 cm / 39' 11"

LIFT RANGE
1955 cm / 64' 2"

ARM REACH
1286 cm / 42' 2"

LENGTH OF REAR END
279 cm / 9' 2"

PIVOT HEIGHT
199 cm / 6' 6"

LIFT CAPACITY
85 kg / 187 lbs

COUNTERWEIGHT REQUIRED
TO BALANCE EMPTY ARM
518 kg / 1142 lbs
FOR MAX LIFT CAPACITY
974 kg / 2147 lbs

CRANE & BASE DOLLY WEIGHT
[EXCL. COUNTERWEIGHT]
846 kg / 1865 lbs

Measurements in mm, unless otherwise specified

Please note: *Technical specifications are subject to change without notice.*

V12

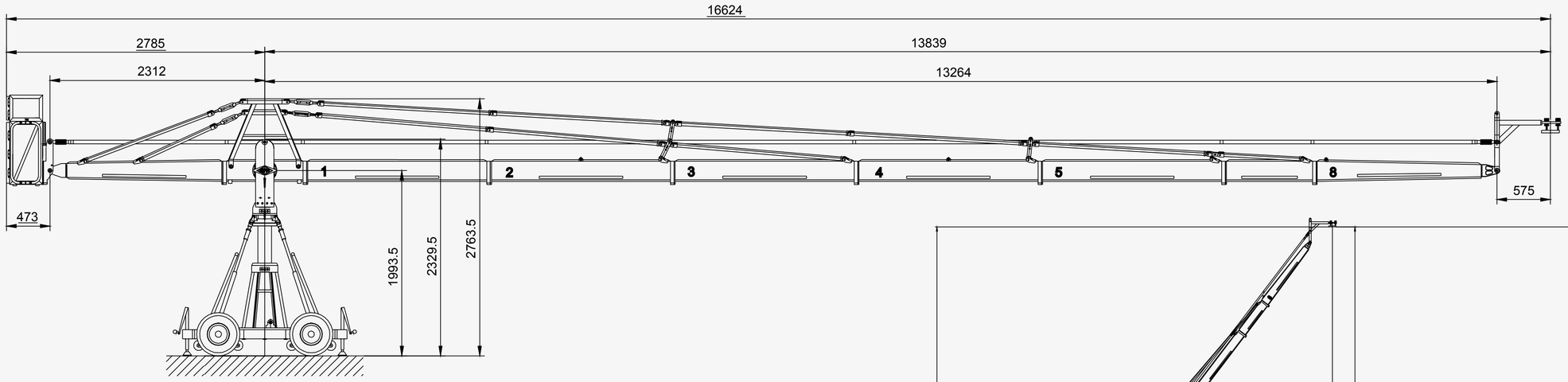

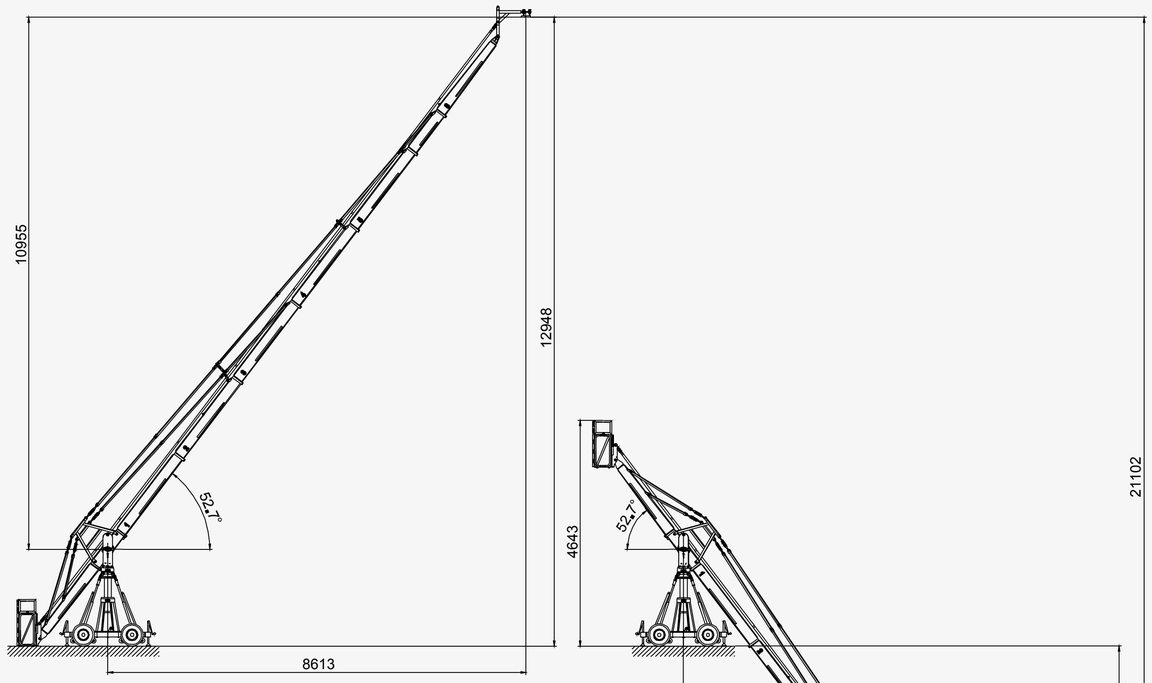

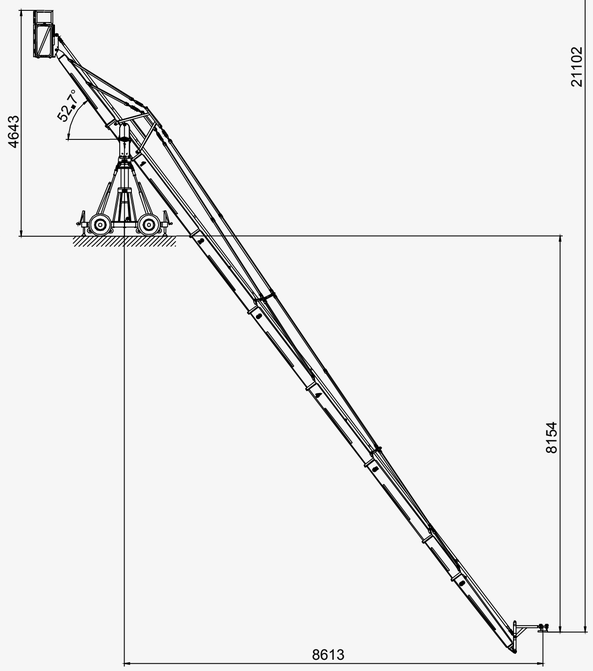

FRONT EXTENSIONS
5 x 200 cm / 6' 7" + 1 x 100 cm / 3' 3" + 1 x 200 cm / 6' 7" conical

REAR EXTENSIONS
1 x 192 cm / 6' 4"

MAX HEIGHT
1295 cm / 42' 6"

LIFT RANGE
2110 cm / 69' 3"

ARM REACH
1384 cm / 45' 5"

LENGTH OF REAR END
279 cm / 9' 2"

PIVOT HEIGHT
199 cm / 6' 6"

LIFT CAPACITY
85 kg / 187 lbs

COUNTERWEIGHT REQUIRED
TO BALANCE EMPTY ARM
700 kg / 1543 lbs
FOR MAX LIFT CAPACITY
1134 kg / 2500 lbs

CRANE & BASE DOLLY WEIGHT
(EXCL. COUNTERWEIGHT)
882 kg / 1945 lbs

Measurements in mm, unless otherwise specified

Please note: *Technical specifications are subject to change without notice.*

V13

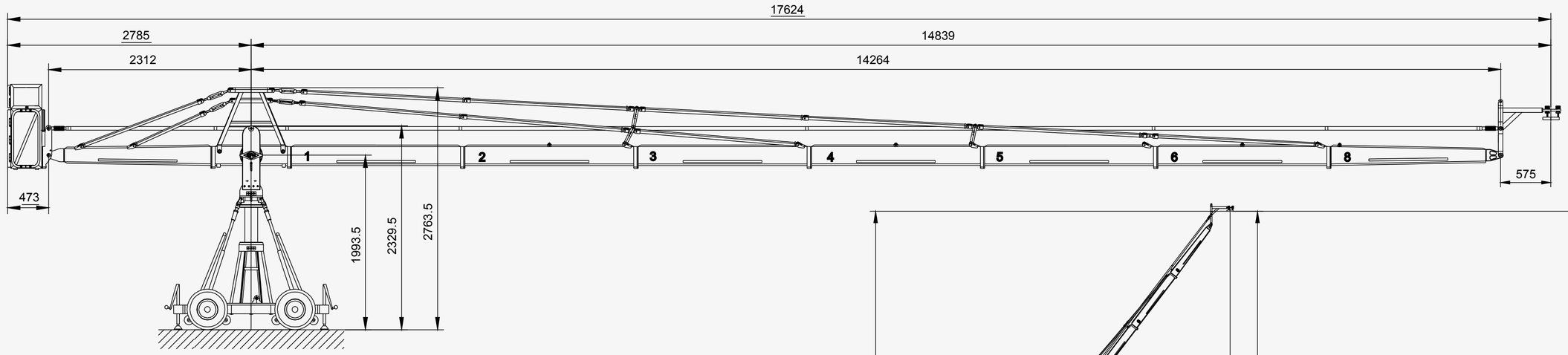

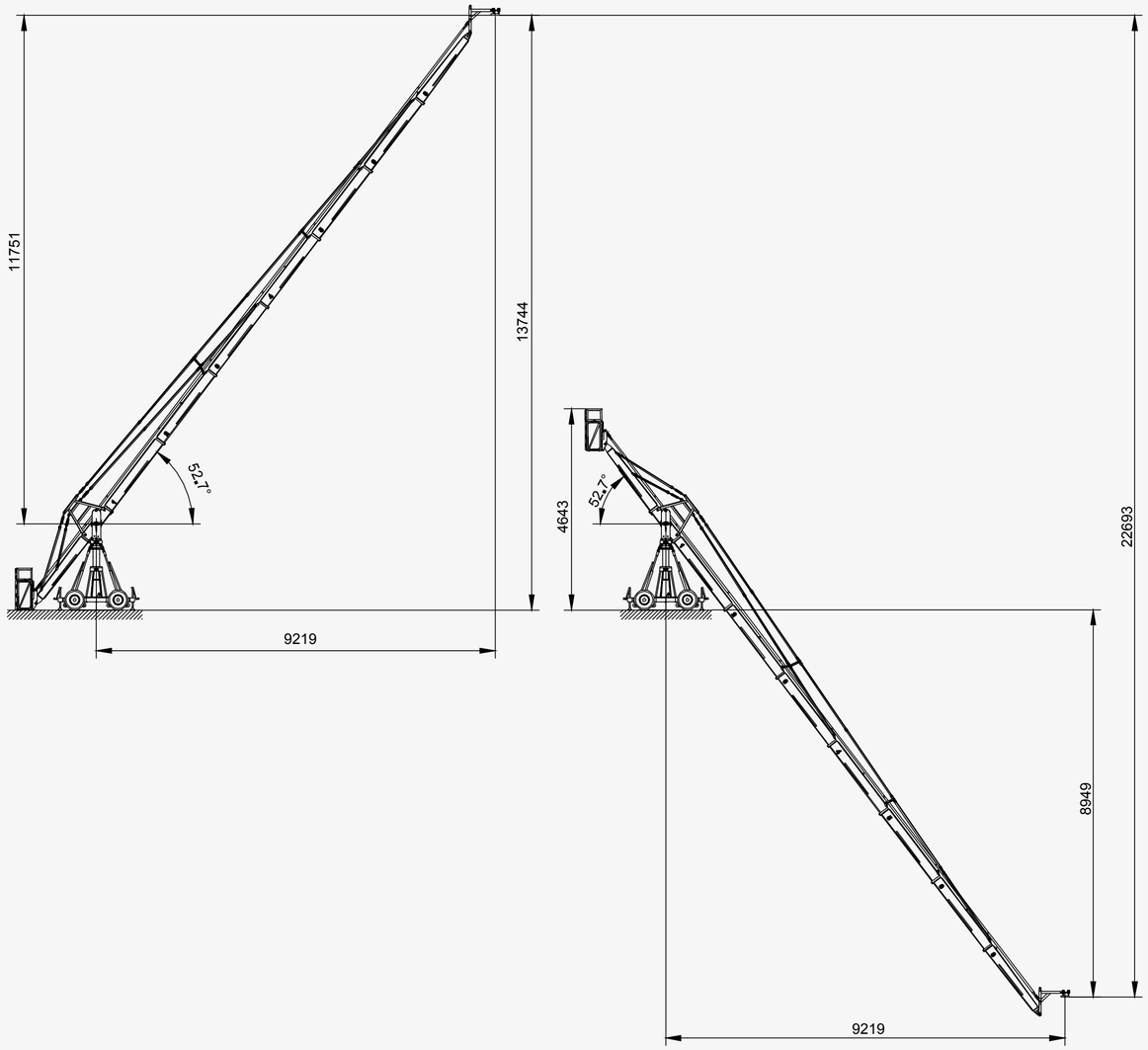

FRONT EXTENSIONS
6 x 200 cm / 6' 7" + 1 x 200 cm / 6' 7" conical

REAR EXTENSIONS
1 x 192 cm / 6' 4"

MAX HEIGHT
1374 cm / 45' 1"

LIFT RANGE
2269 cm / 74' 5"

ARM REACH
1484 cm / 48' 8"

LENGTH OF REAR END
279 cm / 9' 2"

PIVOT HEIGHT
199 cm / 6' 6"

LIFT CAPACITY
80 kg / 176 lbs

COUNTERWEIGHT REQUIRED
TO BALANCE EMPTY ARM
722 kg / 1592 lbs
FOR MAX LIFT CAPACITY
1218 kg / 2685 lbs

CRANE & BASE DOLLY WEIGHT
(EXCL. COUNTERWEIGHT)
895 kg / 1973 lbs

Measurements in mm, unless otherwise specified

Please note: *Technical specifications are subject to change without notice.*

V14

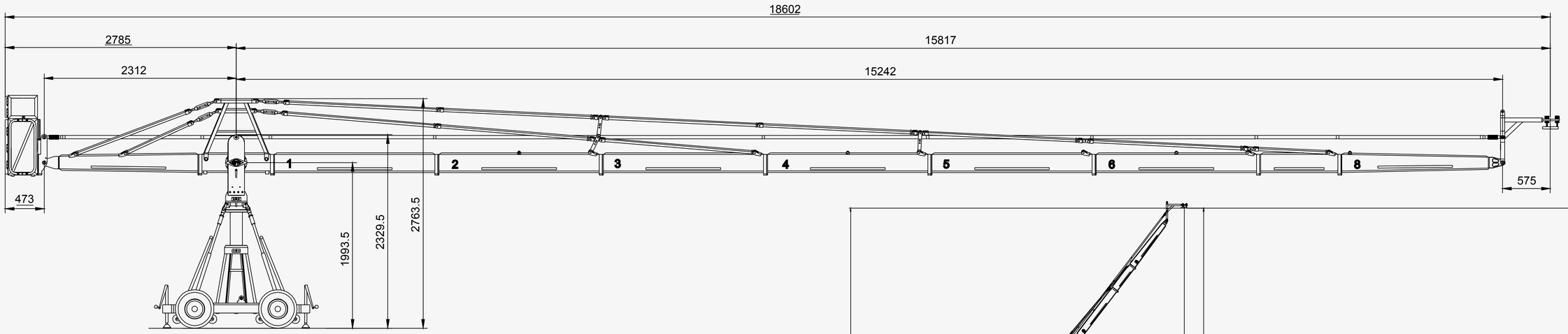

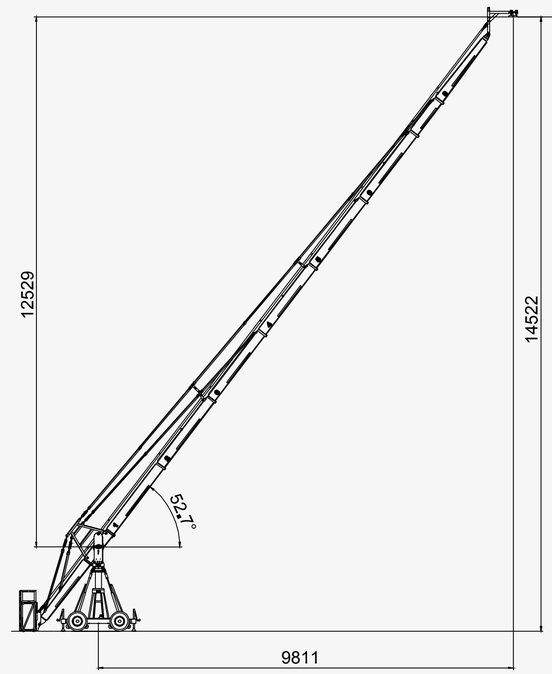

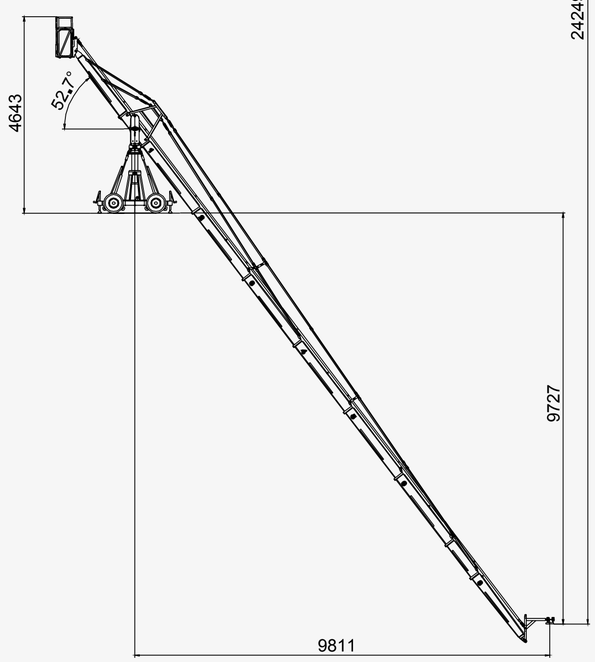

FRONT EXTENSIONS
6 x 200 cm / 6' 7" + 1 x 100 cm / 3' 3" + 1 x 200 cm / 6' 7" conical

REAR EXTENSIONS
1 x 192 cm / 6' 4"

MAX HEIGHT
1452 cm / 47' 8"

LIFT RANGE
2425 cm / 79' 7"

ARM REACH
1582 cm / 51' 11"

LENGTH OF REAR END
279 cm / 9' 2"

PIVOT HEIGHT
199 cm / 6' 6"

LIFT CAPACITY
80 kg / 176 lbs

COUNTERWEIGHT REQUIRED
TO BALANCE EMPTY ARM
854 kg / 1883 lbs
FOR MAX LIFT CAPACITY
1394 kg / 3073 lbs

CRANE & BASE DOLLY WEIGHT
[EXCL. COUNTERWEIGHT]
915 kg / 2017 lbs

Measurements in mm, unless otherwise specified

Please note: *Technical specifications are subject to change without notice.*

V15

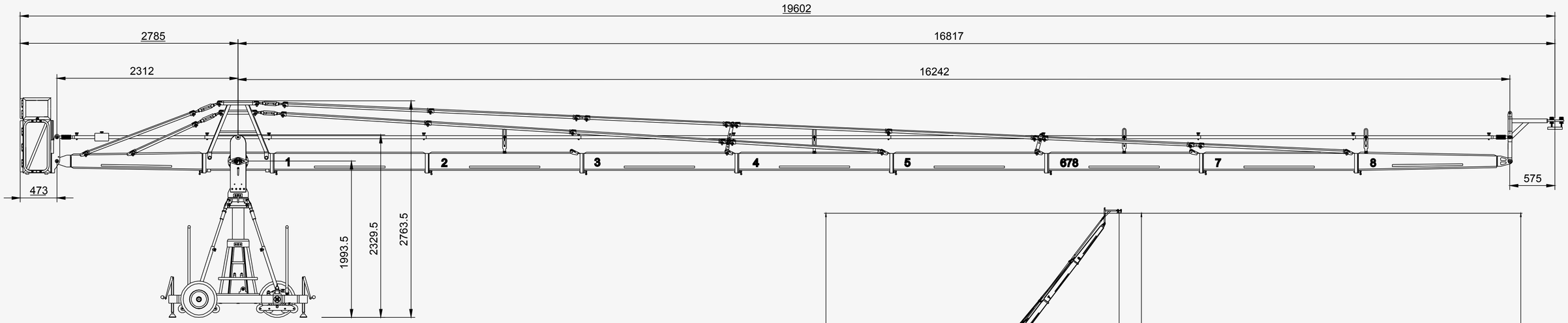

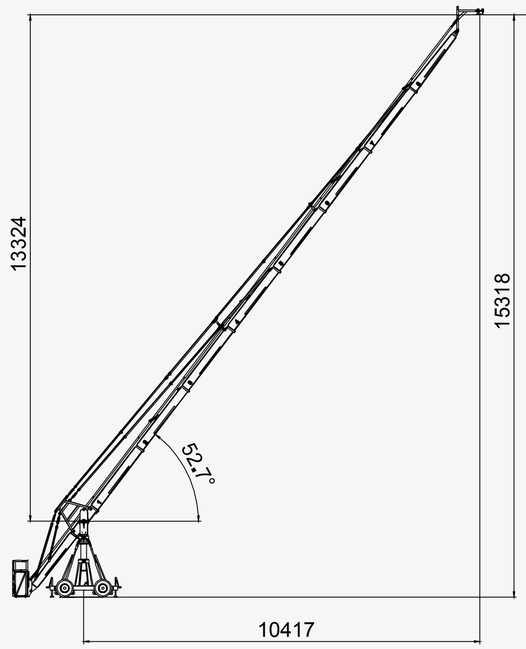

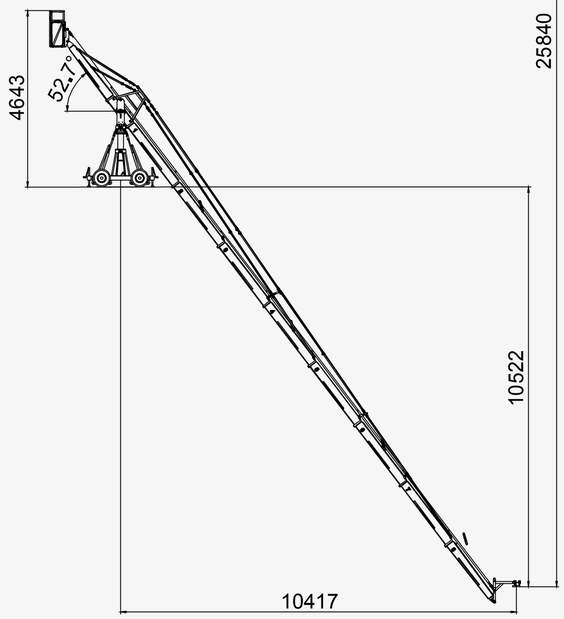

FRONT EXTENSIONS
7 x 200 cm / 6'7" + 1 x 200 cm / 6'7" conical

REAR EXTENSIONS
1 x 192 cm / 6'4"

MAX HEIGHT
1532 cm / 50'3"

LIFT RANGE
2584 cm / 84'9"

ARM REACH
1682 cm / 55'2"

LENGTH OF REAR END
279 cm / 9'2"

PIVOT HEIGHT
199 cm / 6'6"

LIFT CAPACITY
60 kg / 132 lbs

COUNTERWEIGHT REQUIRED
TO BALANCE EMPTY ARM
938 kg / 2068 lbs
FOR MAX LIFT CAPACITY
1362 kg / 3003 lbs

CRANE & BASE DOLLY WEIGHT
(EXCL. COUNTERWEIGHT)
927 kg / 2043 lbs

Measurements in mm, unless otherwise specified

Please note: *Technical specifications are subject to change without notice.*