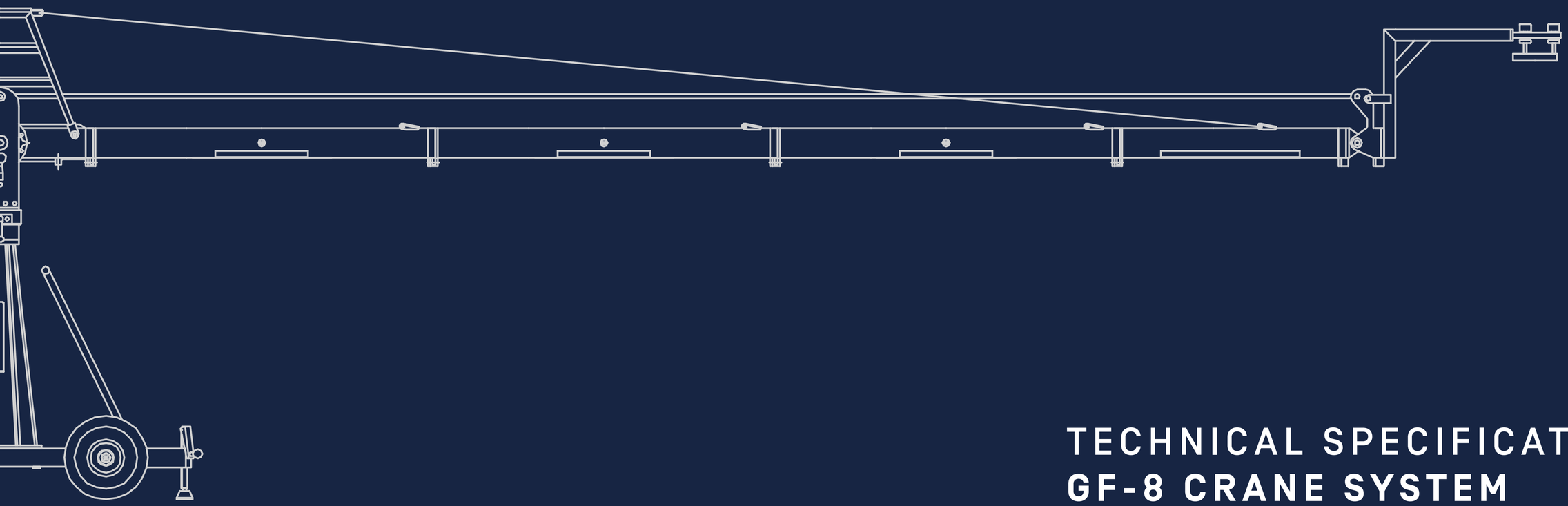

TECHNICAL SPECIFICATIONS — GF-8 CRANE SYSTEM

#	Max. Euro-adapter height / Max. Mitchell plate height	Lift range	Arm reach	Length of rear end	Front extensions	Rear extensions	Lift capacity (working load)	Counterweight required for max. lift capacity	Crane & base dolly weight excluding counterweight
VERSION 1	331 cm / 10' 10"	319 cm / 10' 6"	253 cm / 8' 4"	220 cm / 7' 2"	1 x 150 cm / 5'	1 x 127 cm / 4' 2"	250 kg / 551 lbs	276 kg / 608 lbs	261 kg / 576 lbs
VERSION 2	412 cm / 13' 6"	481 cm / 15' 10"	351 cm / 11' 6"	220 cm / 7' 2"	1 x 150 cm / 5' + 1 x 100 cm / 3' 3"	1 x 127 cm / 4' 2"	250 kg / 551 lbs	456 kg / 1005 lbs	285 kg / 629 lbs
VERSION 3	453 cm / 14' 10"	564 cm / 18' 6"	401 cm / 13' 2"	220 cm / 7' 2"	2 x 150 cm / 5'	1 x 127 cm / 4' 2"	216 kg / 476 lbs	480 kg / 1058 lbs	291 kg / 642 lbs
VERSION 4	534 cm / 17' 6"	727 cm / 23' 10"	499 cm / 16' 4"	220 cm / 7' 2"	2 x 150 cm / 5' + 1 x 100 cm / 3' 3"	1 x 127 cm / 4' 2"	150 kg / 331 lbs	480 kg / 1058 lbs	303 kg / 669 lbs
VERSION 5	576 cm / 18' 11"	809 cm / 26' 7"	549 cm / 18'	220 cm / 7' 2"	3 x 150 cm / 5'	1 x 127 cm / 4' 2"	130 kg / 287 lbs	480 kg / 1058 lbs	309 kg / 682 lbs
VERSION 6	675 cm / 22' 2"	971 cm / 31' 10"	657 cm / 21' 7"	220 cm / 7' 2"	3 x 150 cm / 5' + 1 x 100 cm / 3' 3"	1 x 127 cm / 4' 2"	80 kg / 176 lbs	420 kg / 926 lbs	312 kg / 687 lbs
VERSION 7	717 cm /23' 6"	1054 cm / 34' 7"	707 cm / 23' 3"	220 cm / 7' 2"	4 x 150 cm / 5'	1 x 127 cm / 4' 2"	80 kg / 176 lbs	476 kg / 1049 lbs	318 kg / 700 lbs
VERSION 8	798 cm / 26' 2"	1217 cm / 39' 11"	805 cm / 26' 5"	220 cm / 7' 2"	4 x 150 cm / 5' + 1 x 100 cm / 3' 3"	1 x 127 cm / 4' 2"	50 kg / 110 lbs	480 kg / 1058 lbs	329 kg / 726 lbs
VERSION 9	361 cm / 11' 10"	319 cm / 10' 6"	253 cm / 8' 4"	220 cm / 7' 2"	1 x 150 cm / 5'	1 x 127 cm / 4' 2"	250 kg / 551 lbs	276 kg / 608 lbs	272 kg / 601 lbs
VERSION 10	442 cm / 14' 5"	481 cm / 15' 10"	351 cm / 11' 6"	220 cm / 7' 2"	1 x 150 cm / 5' + 1 x 100 cm / 3' 3"	1 x 127 cm / 4' 2"	250 kg / 551 lbs	456 kg / 1005 lbs	296 kg / 653 lbs
VERSION 11	483 cm / 15' 10"	564 cm / 18' 6"	401 cm / 13' 2"	220 cm / 7' 2"	2 x 150 cm / 5'	1 x 127 cm / 4' 2"	216 kg / 476 lbs	480 kg / 1058 lbs	302 kg / 666 lbs
VERSION 12	564 cm / 18' 6"	727 cm / 23' 10"	499 cm / 16' 4"	220 cm / 7' 2"	2 x 150 cm / 5' + 1 x 100 cm / 3' 3"	1 x 127 cm / 4' 2"	150 kg / 331 lbs	480 kg / 1058 lbs	314 kg / 693 lbs
VERSION 13	606 cm / 19' 10"	809 cm / 26' 7"	549 cm / 18'	220 cm / 7' 2"	3 x 150 cm / 5'	1 x 127 cm / 4' 2"	130 kg / 287 lbs	480 kg / 1058 lbs	320 kg / 706 lbs
VERSION 14	705 cm / 23' 2"	971 cm / 31' 10"	657 cm / 21' 7"	220 cm / 7' 2"	3 x 150 cm / 5' + 1 x 100 cm / 3' 3"	1 x 127 cm / 4' 2"	80 kg / 176 lbs	420 kg / 926 lbs	323 kg / 711 lbs
VERSION 15	747 cm / 24' 6"	1054 cm / 34' 7"	707 cm / 23' 3"	220 cm / 7' 2"	4 x 150 cm / 5'	1 x 127 cm / 4' 2"	80 kg / 176 lbs	476 kg / 1049 lbs	329 kg / 725 lbs
VERSION 16	828 cm / 27' 2"	1217 cm / 39' 11"	805 cm / 26' 5"	220 cm / 7' 2"	4 x 150 cm / 5' + 1 x 100 cm / 3' 3"	1 x 127 cm / 4' 2"	50 kg / 110 lbs	480 kg / 1058 lbs	340 kg / 750 lbs
VERSION 17	850 cm / 27' 11"	1261 cm / 41' 5"	832 cm / 27' 4"	243 cm / 7' 11"	4 x 150 cm / 5' + 1 x 127 cm / 4' 2"	1 x 150 cm / 5'	50 kg / 110 lbs	418 kg / 922 lbs	351 kg / 774 lbs
VERSION 18	931 cm / 30' 7"	1424 cm / 46' 8"	930 cm / 30' 6"	243 cm / 7' 11"	4 x 150 cm / 5' + 1 x 127 cm / 4' 2" + 1 x 100 cm / 3' 3"	1 x 150 cm / 5'	50 kg / 110 lbs	498 kg / 1098 lbs	362 kg / 799 lbs

PLATFORM
(2 PERSON)

PLATFORM
(1 PERSON)

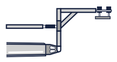

REMOTE OPERATION

DOLLY DIMENSIONS (IN MM)
(IDENTICAL FOR ALL VERSIONS)

WEIGHT – 112 kg / 247 lbs

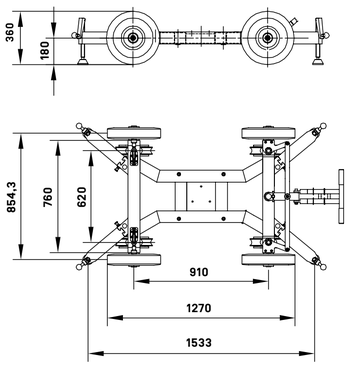

CRANE MEASUREMENTS

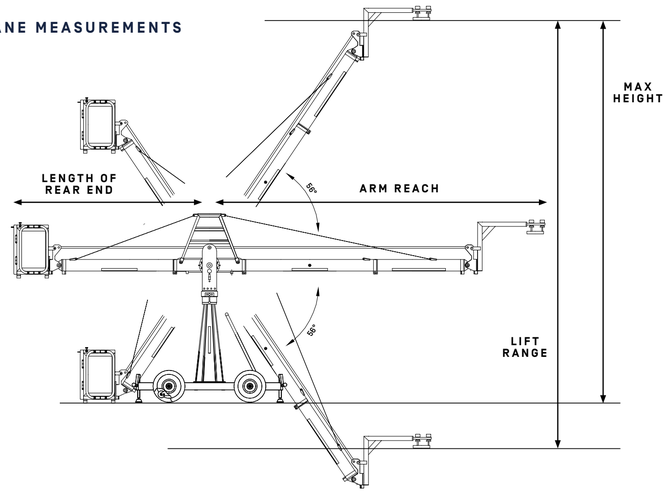

Please note: *Technical specifications are subject to change without notice.*

VERSION 1

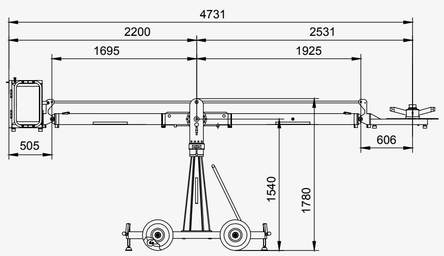

Horizontal position

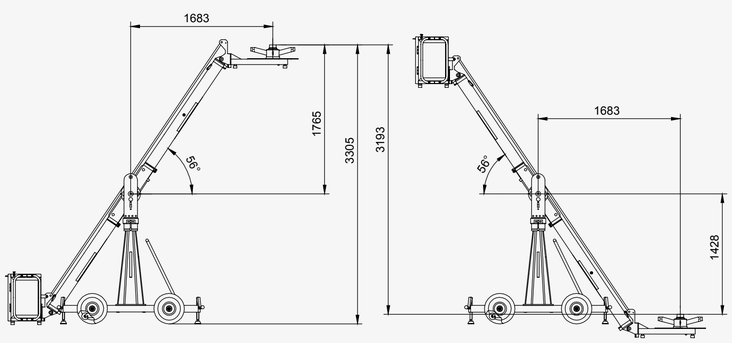

Highest position

Lowest position

FRONT EXTENSIONS
1 x 150 cm / 5'

REAR EXTENSIONS
1 x 127 cm / 4' 2"

MAX HEIGHT
331 cm / 10' 10"

LIFT RANGE
319 cm / 10' 6"

ARM REACH
253 cm / 8' 4"

LENGTH OF REAR END
220 cm / 7' 2"

PIVOT HEIGHT
154 cm / 5' 1"

LIFT CAPACITY
250 kg / 551 lbs

COUNTERWEIGHT REQUIRED
TO BALANCE EMPTY ARM
1.5 kg on platform
FOR MAX LIFT CAPACITY
276 kg / 608 lbs

CRANE & BASE DOLLY WEIGHT
(EXCL. COUNTERWEIGHT)
261 kg / 576 lbs

VERSION 2

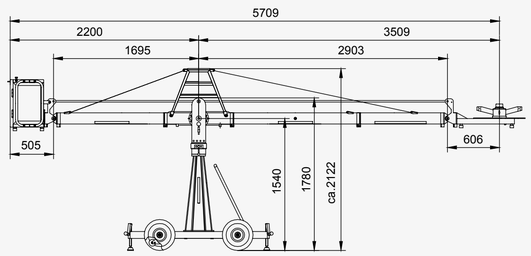

Horizontal position

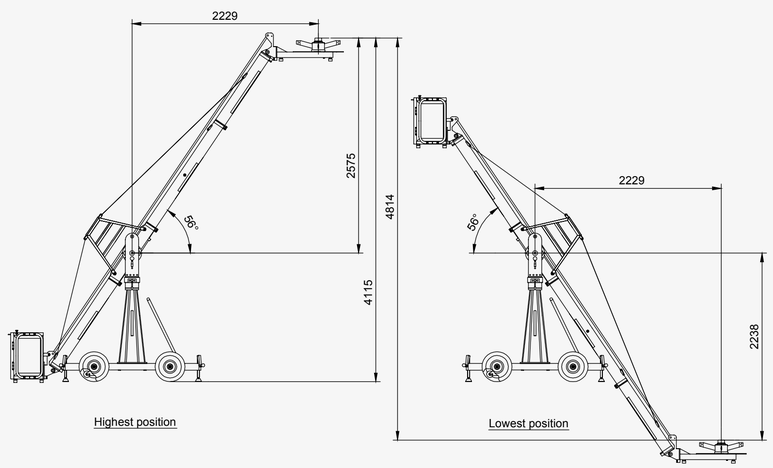

Highest position

Lowest position

FRONT EXTENSIONS
1 x 150 cm / 5' + 1 x 100 cm / 3' 3"

REAR EXTENSIONS
1 x 127 cm / 4' 2"

MAX HEIGHT
412 cm / 13' 6"

LIFT RANGE
481 cm / 15' 10"

ARM REACH
351 cm / 11' 6"

LENGTH OF REAR END
220 cm / 7' 2"

PIVOT HEIGHT
154 cm / 5' 1"

LIFT CAPACITY
250 kg / 551 lbs

COUNTERWEIGHT REQUIRED
TO BALANCE EMPTY ARM
28 kg / 62 lbs
FOR MAX LIFT CAPACITY
456 kg / 1005 lbs

CRANE & BASE DOLLY WEIGHT
(EXCL. COUNTERWEIGHT)
285 kg / 629 lbs

Measurements in mm, unless otherwise specified

Please note: *Technical specifications are subject to change without notice.*

VERSION 3

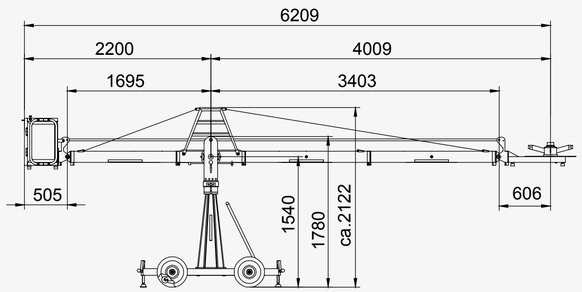

Horizontal position

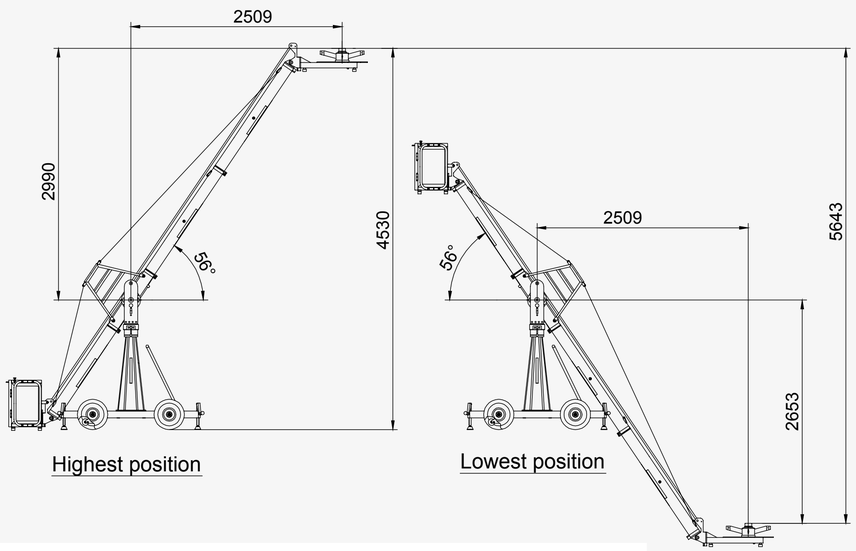

Highest position

Lowest position

FRONT EXTENSIONS
2 x 150 cm / 5'

REAR EXTENSIONS
1 x 127 cm / 4' 2"

MAX HEIGHT
453 cm / 14' 10"

LIFT RANGE
564 cm / 18' 6"

ARM REACH
401 cm / 13' 2"

LENGTH OF REAR END
220 cm / 7' 2"

PIVOT HEIGHT
154 cm / 5' 1"

LIFT CAPACITY
216 kg / 476 lbs

COUNTERWEIGHT REQUIRED
TO BALANCE EMPTY ARM
46 kg / 101 lbs
FOR MAX LIFT CAPACITY
480 kg / 1058 lbs

CRANE & BASE DOLLY WEIGHT
(EXCL. COUNTERWEIGHT)
291 kg / 642 lbs

VERSION 4

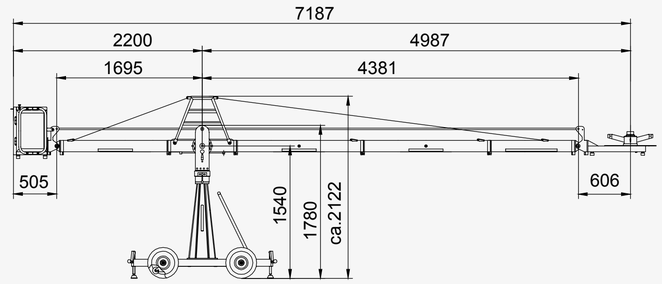

Horizontal position

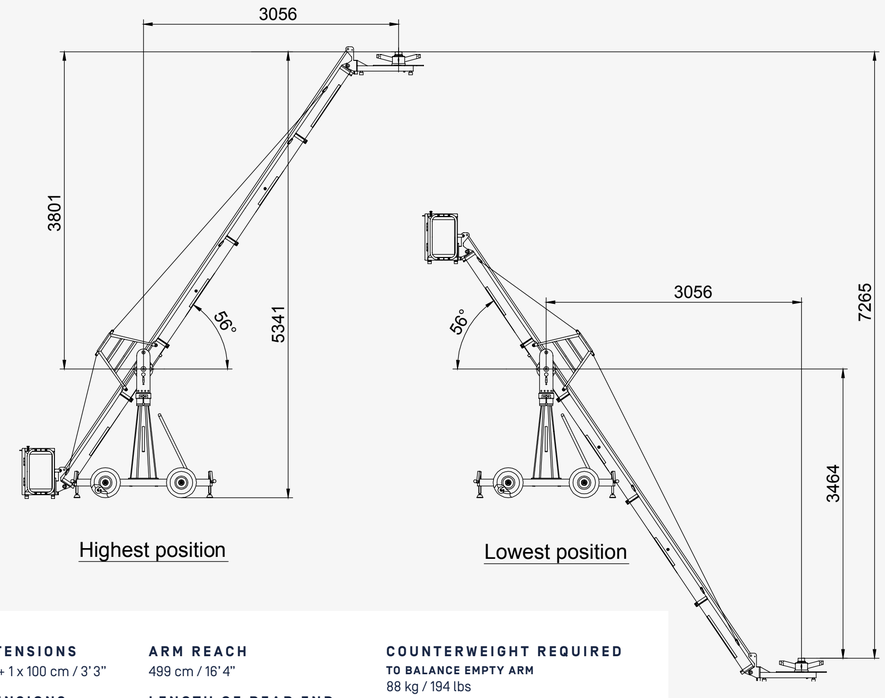

Highest position

Lowest position

FRONT EXTENSIONS
2 x 150 cm / 5' + 1 x 100 cm / 3' 3"

REAR EXTENSIONS
1 x 127 cm / 4' 2"

MAX HEIGHT
534 cm / 17' 6"

LIFT RANGE
727 cm / 23' 10"

ARM REACH
499 cm / 16' 4"

LENGTH OF REAR END
220 cm / 7' 2"

PIVOT HEIGHT
154 cm / 5' 1"

LIFT CAPACITY
150 kg / 331 lbs

COUNTERWEIGHT REQUIRED
TO BALANCE EMPTY ARM
88 kg / 194 lbs
FOR MAX LIFT CAPACITY
480 kg / 1058 lbs

CRANE & BASE DOLLY WEIGHT
(EXCL. COUNTERWEIGHT)
303 kg / 669 lbs

Measurements in mm, unless otherwise specified

Please note: *Technical specifications are subject to change without notice.*

VERSION 5

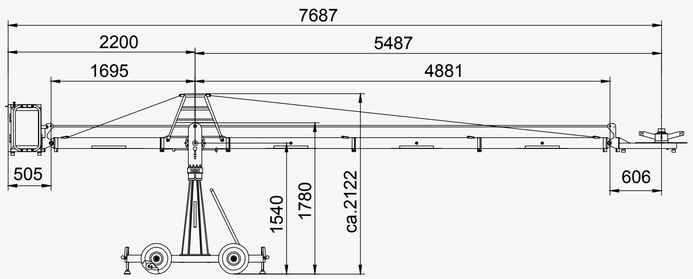

Horizontal position

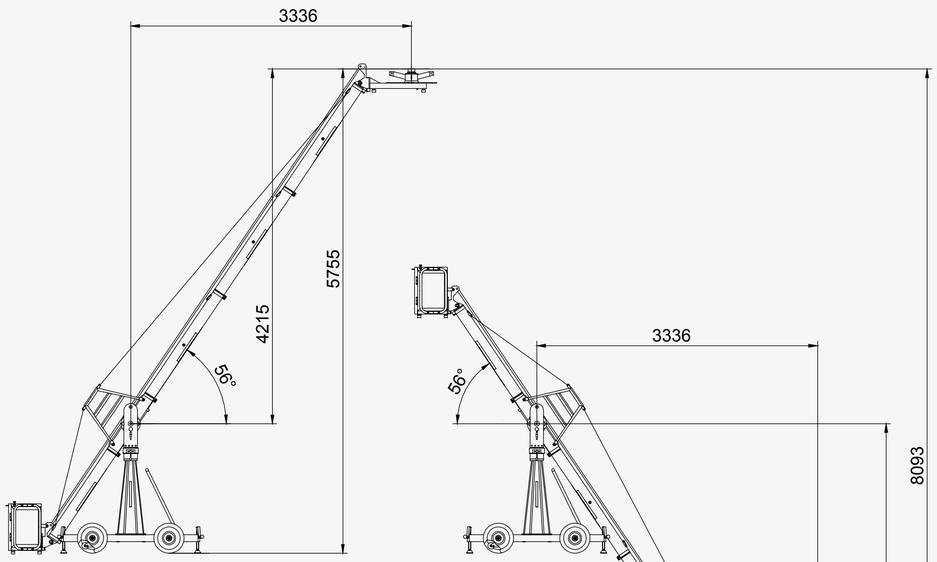

Highest position

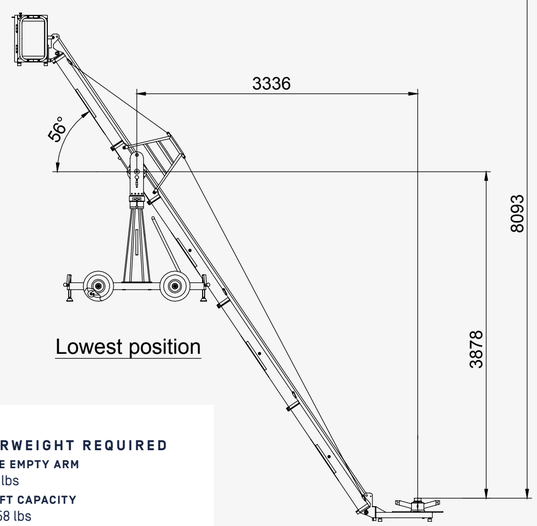

Lowest position

FRONT EXTENSIONS
3 x 150 cm / 5'

REAR EXTENSIONS
1 x 127 cm / 4'2"

MAX HEIGHT
576 cm / 18'11"

LIFT RANGE
809 cm / 26'7"

ARM REACH
549 cm / 18'

LENGTH OF REAR END
220 cm / 7'2"

PIVOT HEIGHT
154 cm / 5'1"

LIFT CAPACITY
130 kg / 287 lbs

COUNTERWEIGHT REQUIRED
TO BALANCE EMPTY ARM
112 kg / 247 lbs
FOR MAX LIFT CAPACITY
480 kg / 1058 lbs

CRANE & BASE DOLLY WEIGHT
(EXCL. COUNTERWEIGHT)
309 kg / 682 lbs

VERSION 6

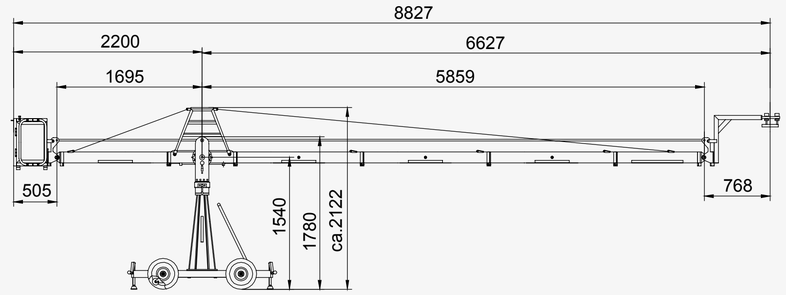

Horizontal position

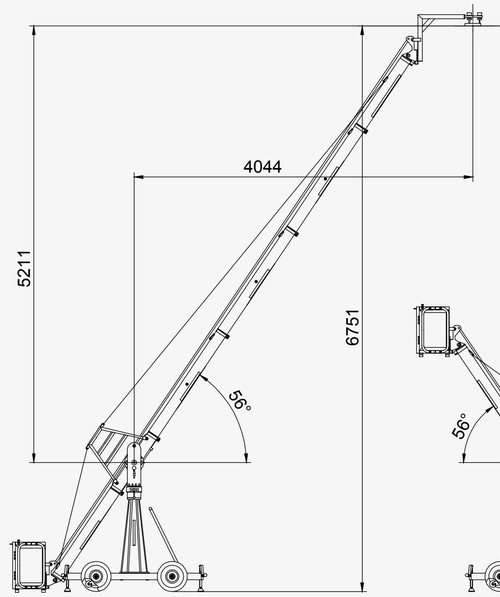

Highest position

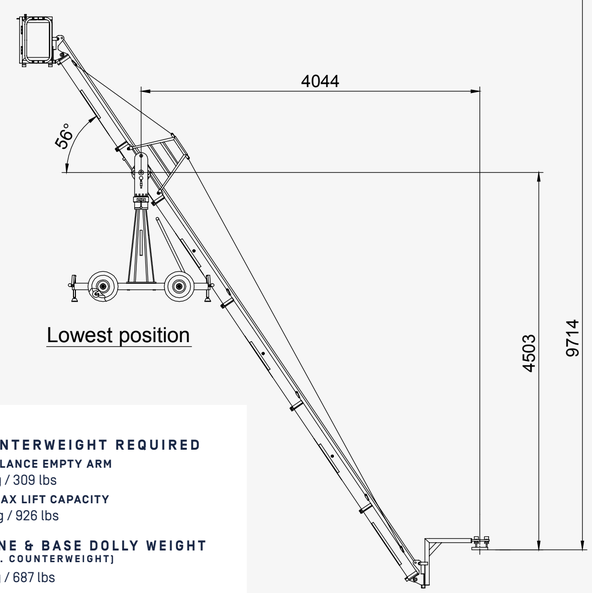

Lowest position

FRONT EXTENSIONS
3 x 150 cm / 5' + 1 x 100 cm / 3'3"

REAR EXTENSIONS
1 x 127 cm / 4'2"

MAX HEIGHT
675 cm / 22'2"

LIFT RANGE
971 cm / 31'10"

ARM REACH
657 cm / 21'7"

LENGTH OF REAR END
220 cm / 7'2"

PIVOT HEIGHT
154 cm / 5'1"

LIFT CAPACITY
80 kg / 176 lbs

COUNTERWEIGHT REQUIRED
TO BALANCE EMPTY ARM
140 kg / 309 lbs
FOR MAX LIFT CAPACITY
420 kg / 926 lbs

CRANE & BASE DOLLY WEIGHT
(EXCL. COUNTERWEIGHT)
312 kg / 687 lbs

Measurements in mm, unless otherwise specified

Please note: *Technical specifications are subject to change without notice.*

VERSION 7

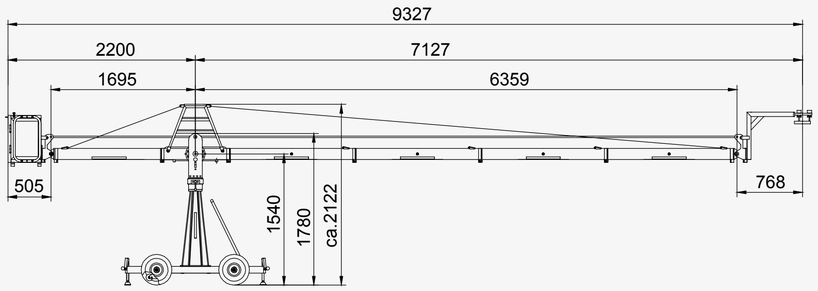

Horizontal position

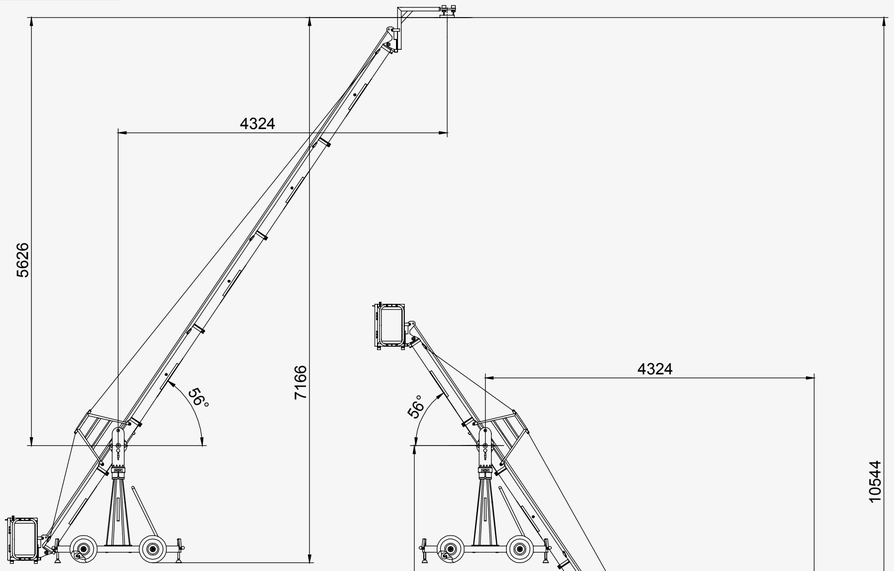

Highest position

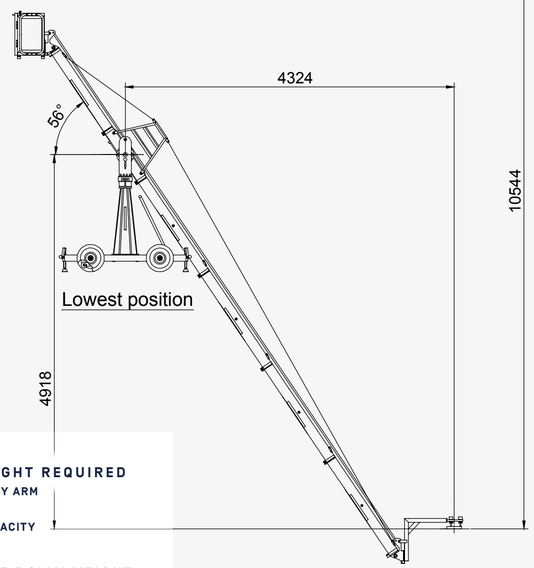

Lowest position

FRONT EXTENSIONS
4 x 150 cm / 5'

REAR EXTENSIONS
1 x 127 cm / 4' 2"

MAX HEIGHT
717 cm /23' 6"

LIFT RANGE
1054 cm / 34' 7"

ARM REACH
707 cm / 23' 3"

LENGTH OF REAR END
220 cm / 7' 2"

PIVOT HEIGHT
154 cm / 5' 1"

LIFT CAPACITY
80 kg / 176 lbs

COUNTERWEIGHT REQUIRED
TO BALANCE EMPTY ARM
172 kg / 379 lbs
FOR MAX LIFT CAPACITY
476 kg / 1049 lbs

CRANE & BASE DOLLY WEIGHT
(EXCL. COUNTERWEIGHT)
318 kg / 700 lbs

VERSION 8

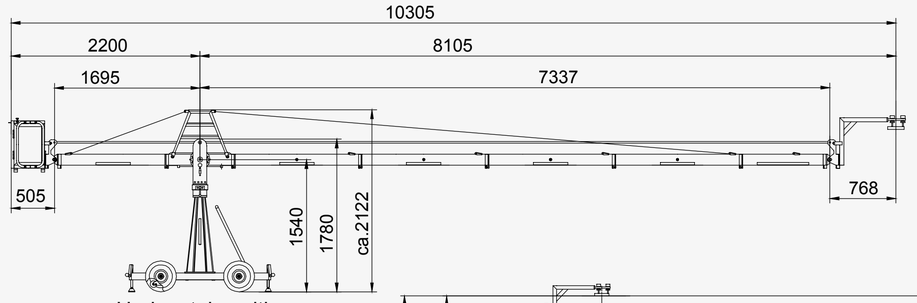

Horizontal position

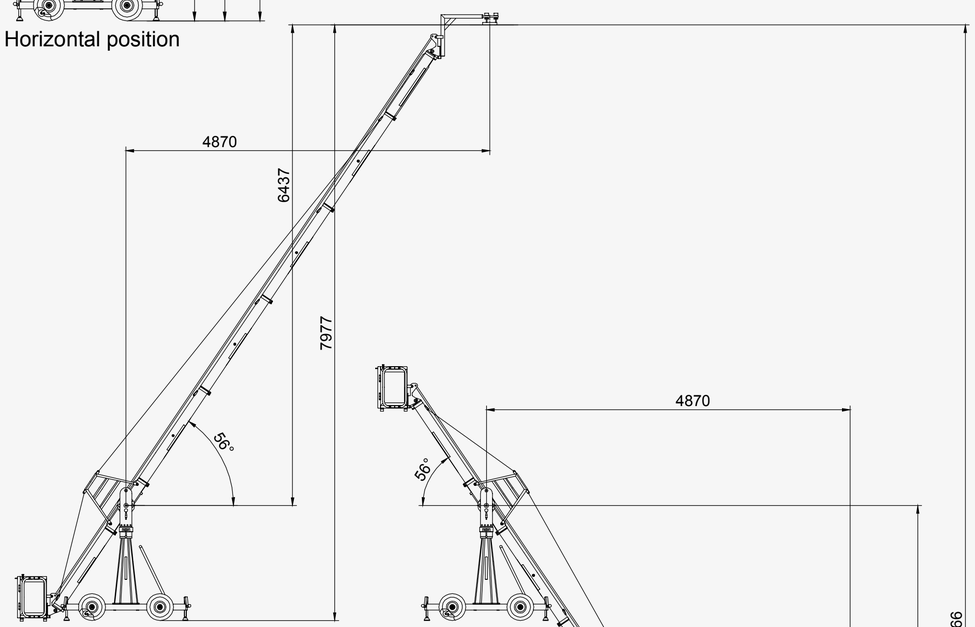

Highest position

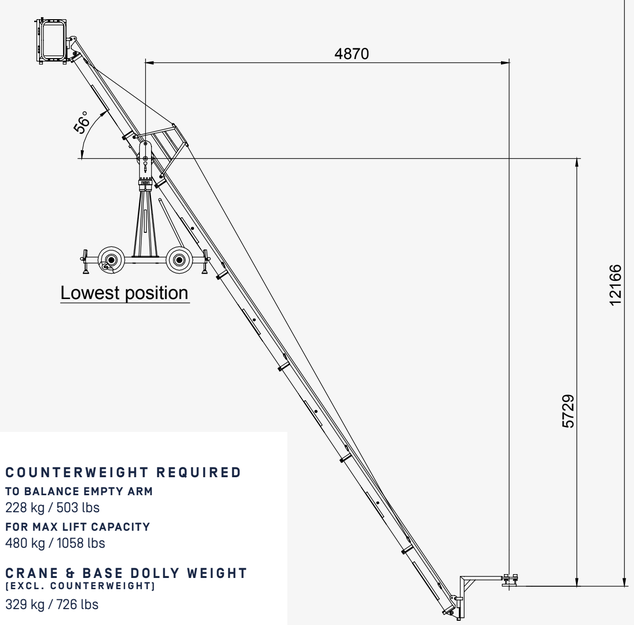

Lowest position

FRONT EXTENSIONS
4 x 150 cm / 5' + 1 x 100 cm / 3' 3"

REAR EXTENSIONS
1 x 127 cm / 4' 2"

MAX HEIGHT
798 cm / 26' 2"

LIFT RANGE
1217 cm / 39' 11"

ARM REACH
805 cm / 26' 5"

LENGTH OF REAR END
220 cm / 7' 2"

PIVOT HEIGHT
154 cm / 5' 1"

LIFT CAPACITY
50 kg / 110 lbs

COUNTERWEIGHT REQUIRED
TO BALANCE EMPTY ARM
228 kg / 503 lbs
FOR MAX LIFT CAPACITY
480 kg / 1058 lbs

CRANE & BASE DOLLY WEIGHT
(EXCL. COUNTERWEIGHT)
329 kg / 726 lbs

Measurements in mm, unless otherwise specified

Please note: *Technical specifications are subject to change without notice.*

VERSION 9

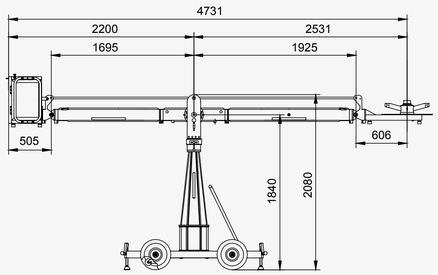

Horizontal position

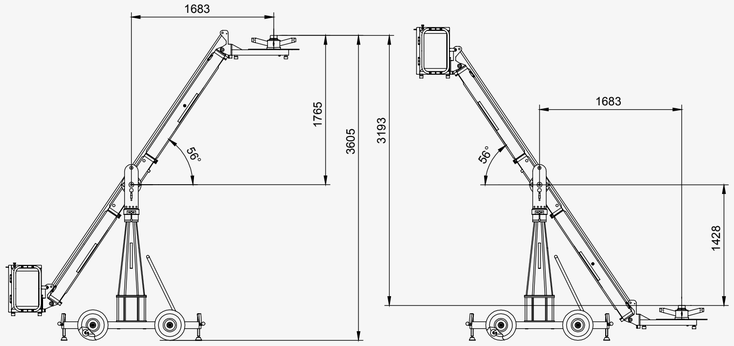

Highest position

Lowest position

FRONT EXTENSIONS
1 x 150 cm / 5'

REAR EXTENSIONS
1 x 127 cm / 4' 2"

MAX HEIGHT
361 cm / 11' 10"

LIFT RANGE
319 cm / 10' 6"

ARM REACH
253 cm / 8' 4"

LENGTH OF REAR END
220 cm / 7' 2"

PIVOT HEIGHT
184 cm / 6'

LIFT CAPACITY
250 kg / 551 lbs

COUNTERWEIGHT REQUIRED
TO BALANCE EMPTY ARM
1.5 kg on platform
FOR MAX LIFT CAPACITY
276 kg / 608 lbs

CRANE & BASE DOLLY WEIGHT
(EXCL. COUNTERWEIGHT)
272 kg / 601 lbs

VERSION 10

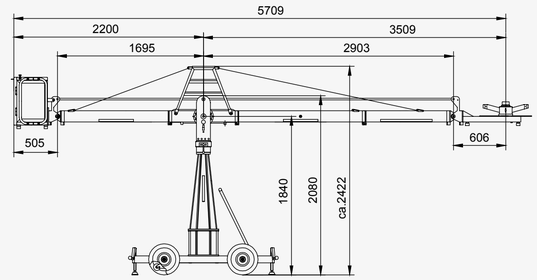

Horizontal position

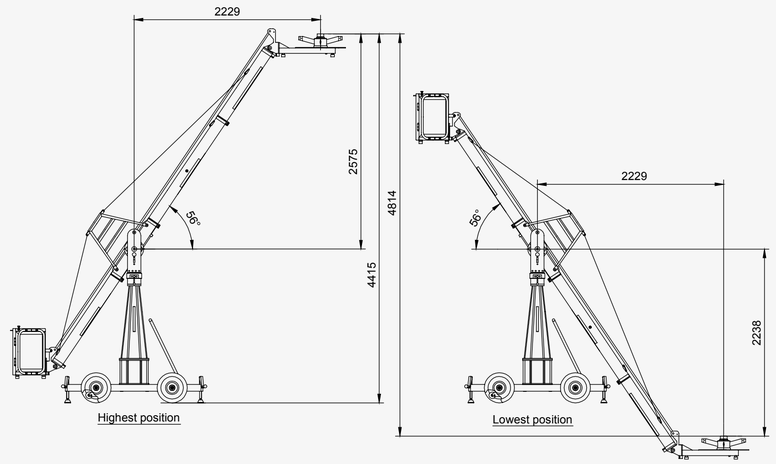

Highest position

Lowest position

FRONT EXTENSIONS
1 x 150 cm / 5' + 1 x 100 cm / 3' 3"

REAR EXTENSIONS
1 x 127 cm / 4' 2"

MAX HEIGHT
442 cm / 14' 5"

LIFT RANGE
481 cm / 15' 10"

ARM REACH
351 cm / 11' 6"

LENGTH OF REAR END
220 cm / 7' 2"

PIVOT HEIGHT
184 cm / 6'

LIFT CAPACITY
250 kg / 551 lbs

COUNTERWEIGHT REQUIRED
TO BALANCE EMPTY ARM
28 kg / 62 lbs
FOR MAX LIFT CAPACITY
456 kg / 1005 lbs

CRANE & BASE DOLLY WEIGHT
(EXCL. COUNTERWEIGHT)
296 kg / 653 lbs

Measurements in mm, unless otherwise specified

Please note: *Technical specifications are subject to change without notice.*

VERSION 11

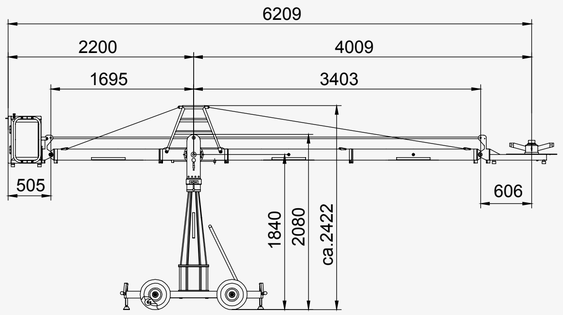

Horizontal position

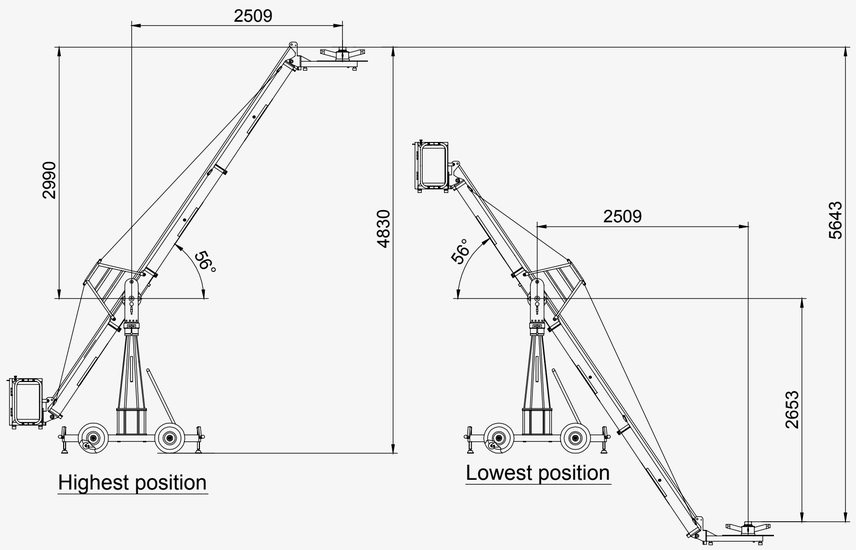

Highest position

Lowest position

FRONT EXTENSIONS
2 x 150 cm / 5'

REAR EXTENSIONS
1 x 127 cm / 4' 2"

MAX HEIGHT
483 cm / 15' 10"

LIFT RANGE
564 cm / 18' 6"

ARM REACH
401 cm / 13' 2"

LENGTH OF REAR END
220 cm / 7' 2"

PIVOT HEIGHT
184 cm / 6'

LIFT CAPACITY
216 kg / 476 lbs

COUNTERWEIGHT REQUIRED
TO BALANCE EMPTY ARM
46 kg / 101 lbs
FOR MAX LIFT CAPACITY
480 kg / 1058 lbs

CRANE & BASE DOLLY WEIGHT
(EXCL. COUNTERWEIGHT)
302 kg / 666 lbs

VERSION 12

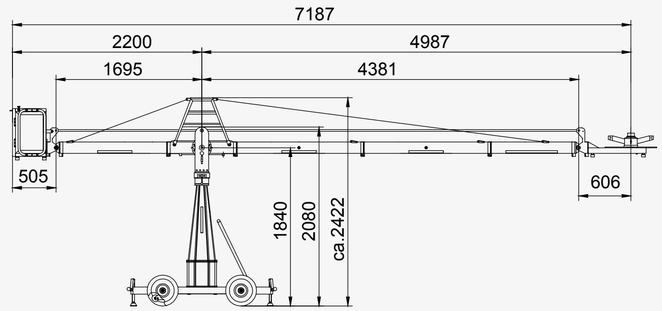

Horizontal position

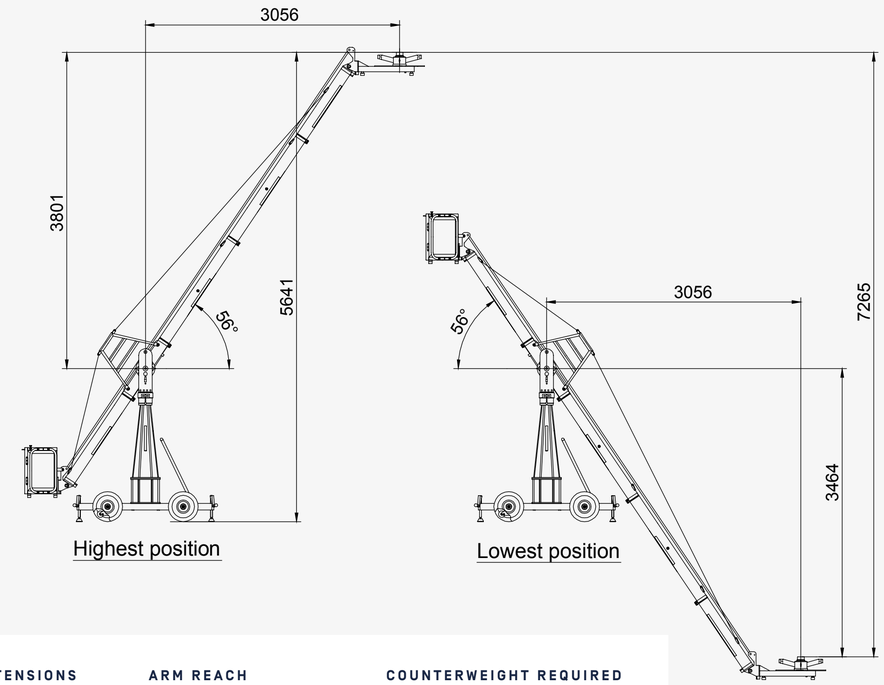

Highest position

Lowest position

FRONT EXTENSIONS
2 x 150 cm / 5' + 1 x 100 cm / 3' 3"

REAR EXTENSIONS
1 x 127 cm / 4' 2"

MAX HEIGHT
564 cm / 18' 6"

LIFT RANGE
727 cm / 23' 10"

ARM REACH
499 cm / 16' 4"

LENGTH OF REAR END
220 cm / 7' 2"

PIVOT HEIGHT
184 cm / 6'

LIFT CAPACITY
150 kg / 331 lbs

COUNTERWEIGHT REQUIRED
TO BALANCE EMPTY ARM
88 kg / 194 lbs
FOR MAX LIFT CAPACITY
480 kg / 1058 lbs

CRANE & BASE DOLLY WEIGHT
(EXCL. COUNTERWEIGHT)
314 kg / 693 lbs

Measurements in mm, unless otherwise specified

Please note: *Technical specifications are subject to change without notice.*

VERSION 13

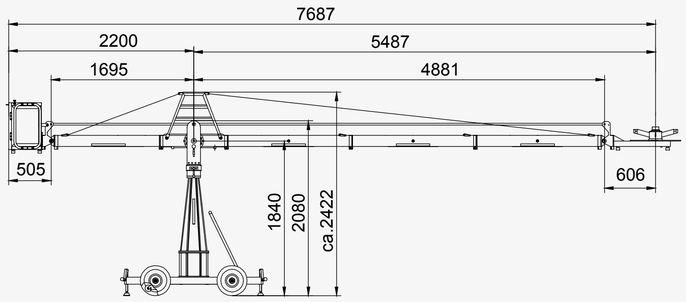

Horizontal position

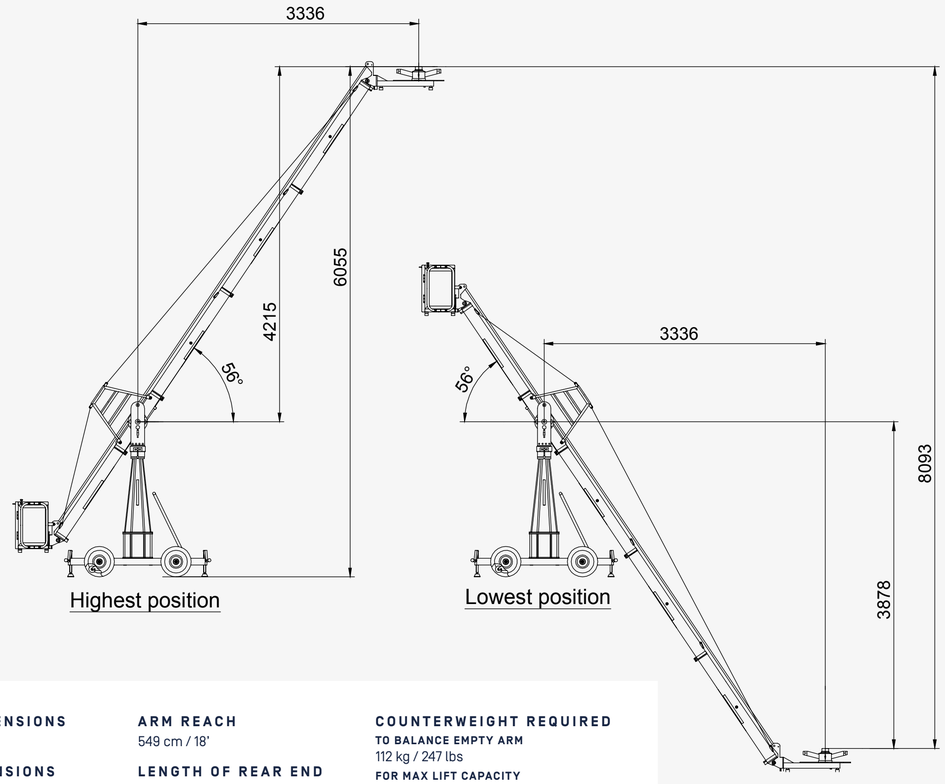

Highest position

Lowest position

FRONT EXTENSIONS
3 x 150 cm / 5'

REAR EXTENSIONS
1 x 127 cm / 4' 2"

MAX HEIGHT
606 cm / 19' 10"

LIFT RANGE
809 cm / 26' 7"

ARM REACH
549 cm / 18'

LENGTH OF REAR END
220 cm / 7' 2"

PIVOT HEIGHT
184 cm / 6'

LIFT CAPACITY
130 kg / 287 lbs

COUNTERWEIGHT REQUIRED
TO BALANCE EMPTY ARM
112 kg / 247 lbs
FOR MAX LIFT CAPACITY
480 kg / 1058 lbs

CRANE & BASE DOLLY WEIGHT
(EXCL. COUNTERWEIGHT)
320 kg / 706 lbs

VERSION 14

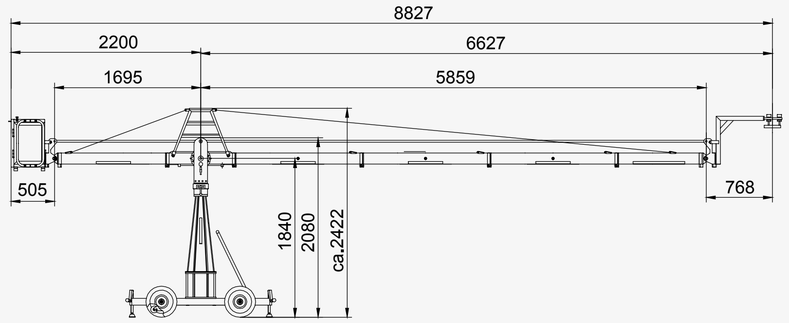

Horizontal position

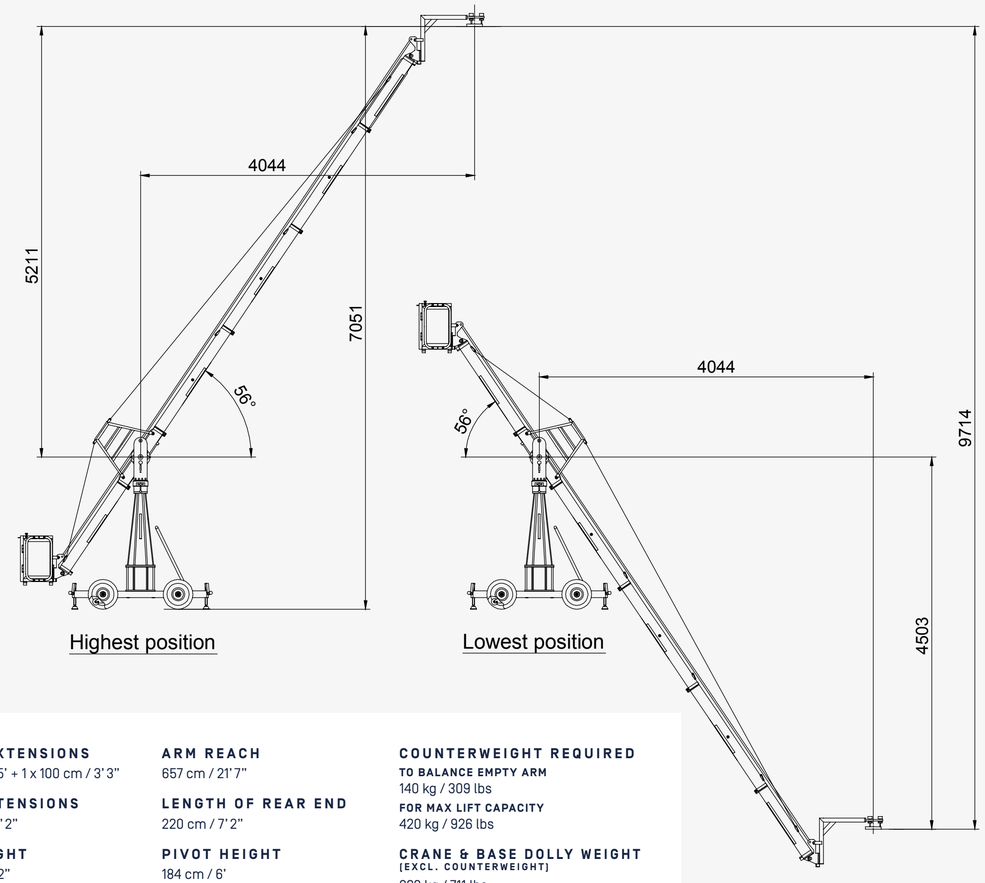

Highest position

Lowest position

FRONT EXTENSIONS
3 x 150 cm / 5' + 1 x 100 cm / 3' 3"

REAR EXTENSIONS
1 x 127 cm / 4' 2"

MAX HEIGHT
705 cm / 23' 2"

LIFT RANGE
971 cm / 31' 10"

ARM REACH
657 cm / 21' 7"

LENGTH OF REAR END
220 cm / 7' 2"

PIVOT HEIGHT
184 cm / 6'

LIFT CAPACITY
80 kg / 176 lbs

COUNTERWEIGHT REQUIRED
TO BALANCE EMPTY ARM
140 kg / 309 lbs
FOR MAX LIFT CAPACITY
420 kg / 926 lbs

CRANE & BASE DOLLY WEIGHT
(EXCL. COUNTERWEIGHT)
323 kg / 711 lbs

Measurements in mm, unless otherwise specified

Please note: *Technical specifications are subject to change without notice.*

VERSION 15

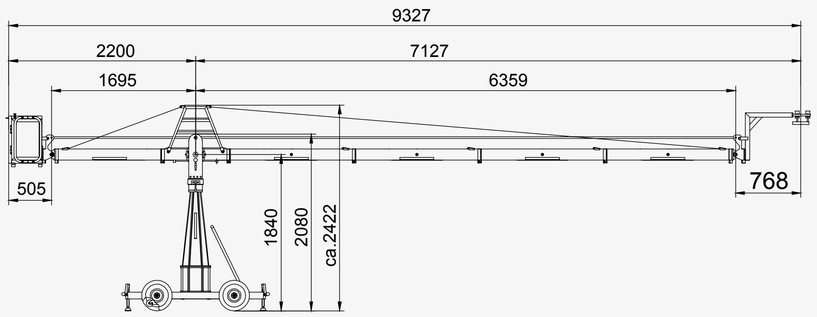

Horizontal position

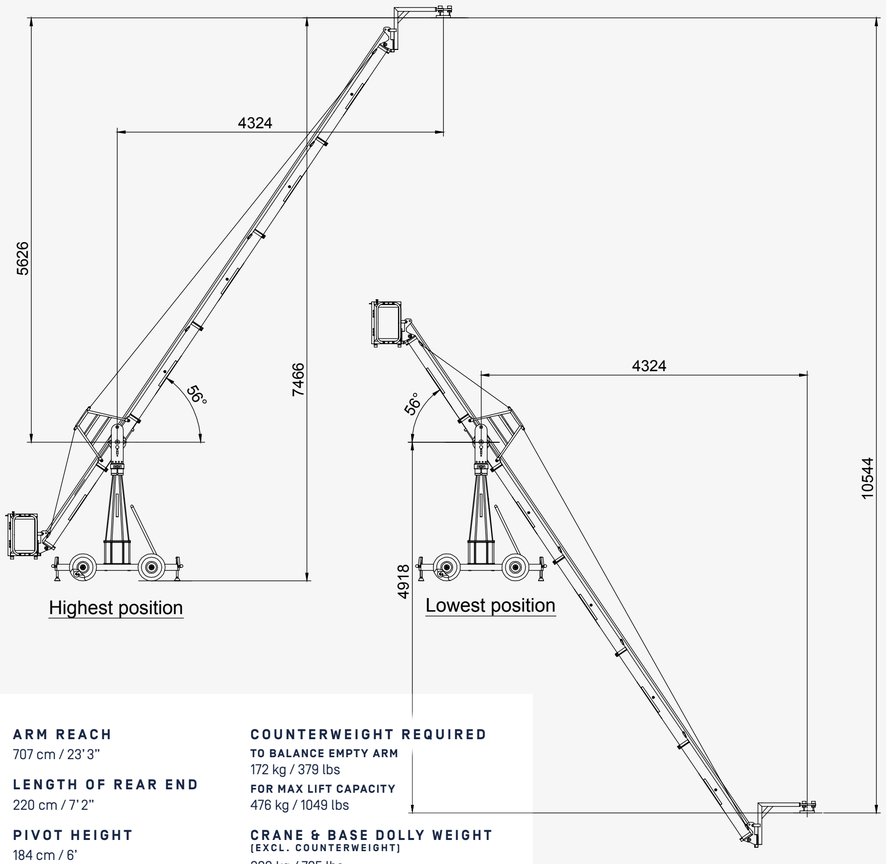

Highest position

Lowest position

FRONT EXTENSIONS
4 x 150 cm / 5'

REAR EXTENSIONS
1 x 127 cm / 4' 2"

MAX HEIGHT
747 cm / 24' 6"

LIFT RANGE
1054 cm / 34' 7"

ARM REACH
707 cm / 23' 3"

LENGTH OF REAR END
220 cm / 7' 2"

PIVOT HEIGHT
184 cm / 6'

LIFT CAPACITY
80 kg / 176 lbs

COUNTERWEIGHT REQUIRED
TO BALANCE EMPTY ARM
172 kg / 379 lbs
FOR MAX LIFT CAPACITY
476 kg / 1049 lbs

CRANE & BASE DOLLY WEIGHT
(EXCL. COUNTERWEIGHT)
329 kg / 725 lbs

VERSION 16

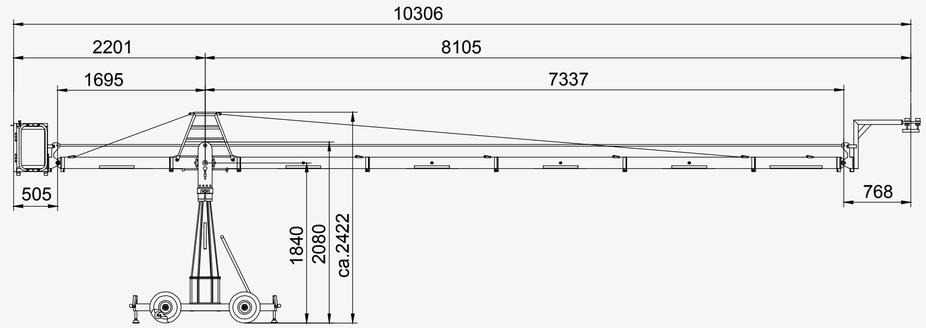

Horizontal position

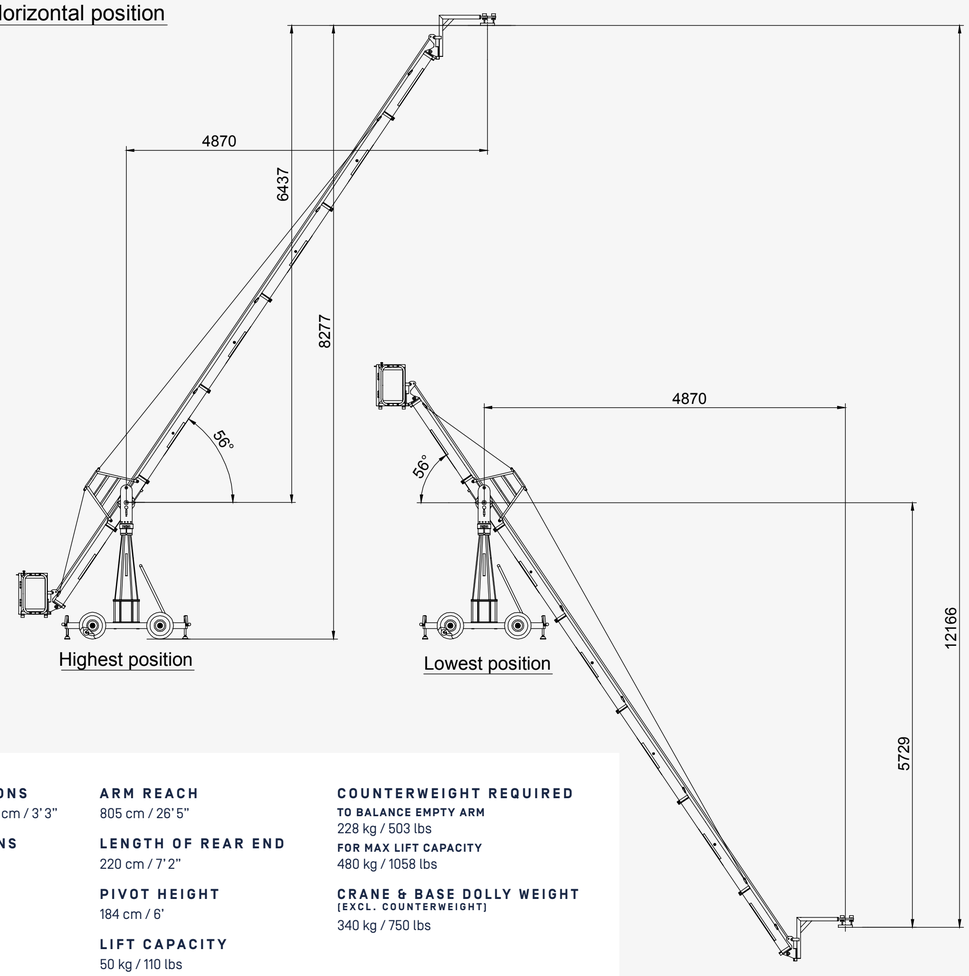

Highest position

Lowest position

FRONT EXTENSIONS
4 x 150 cm / 5' + 1 x 100 cm / 3' 3"

REAR EXTENSIONS
1 x 127 cm / 4' 2"

MAX HEIGHT
828 cm / 27' 2"

LIFT RANGE
1217 cm / 39' 11"

ARM REACH
805 cm / 26' 5"

LENGTH OF REAR END
220 cm / 7' 2"

PIVOT HEIGHT
184 cm / 6'

LIFT CAPACITY
50 kg / 110 lbs

COUNTERWEIGHT REQUIRED
TO BALANCE EMPTY ARM
228 kg / 503 lbs
FOR MAX LIFT CAPACITY
480 kg / 1058 lbs

CRANE & BASE DOLLY WEIGHT
(EXCL. COUNTERWEIGHT)
340 kg / 750 lbs

Measurements in mm, unless otherwise specified

Please note: *Technical specifications are subject to change without notice.*

VERSION 17

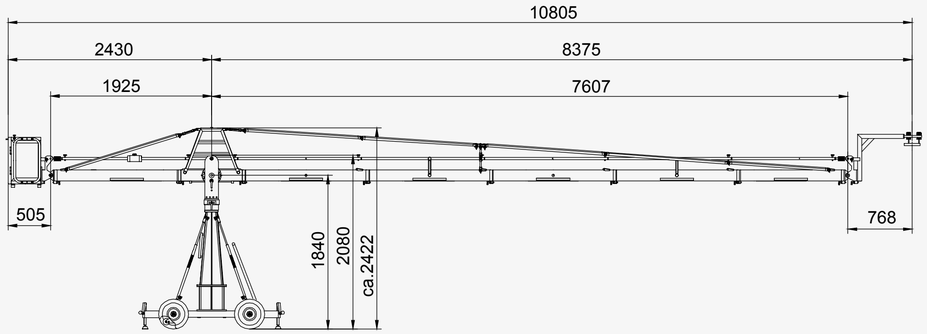

Horizontal position

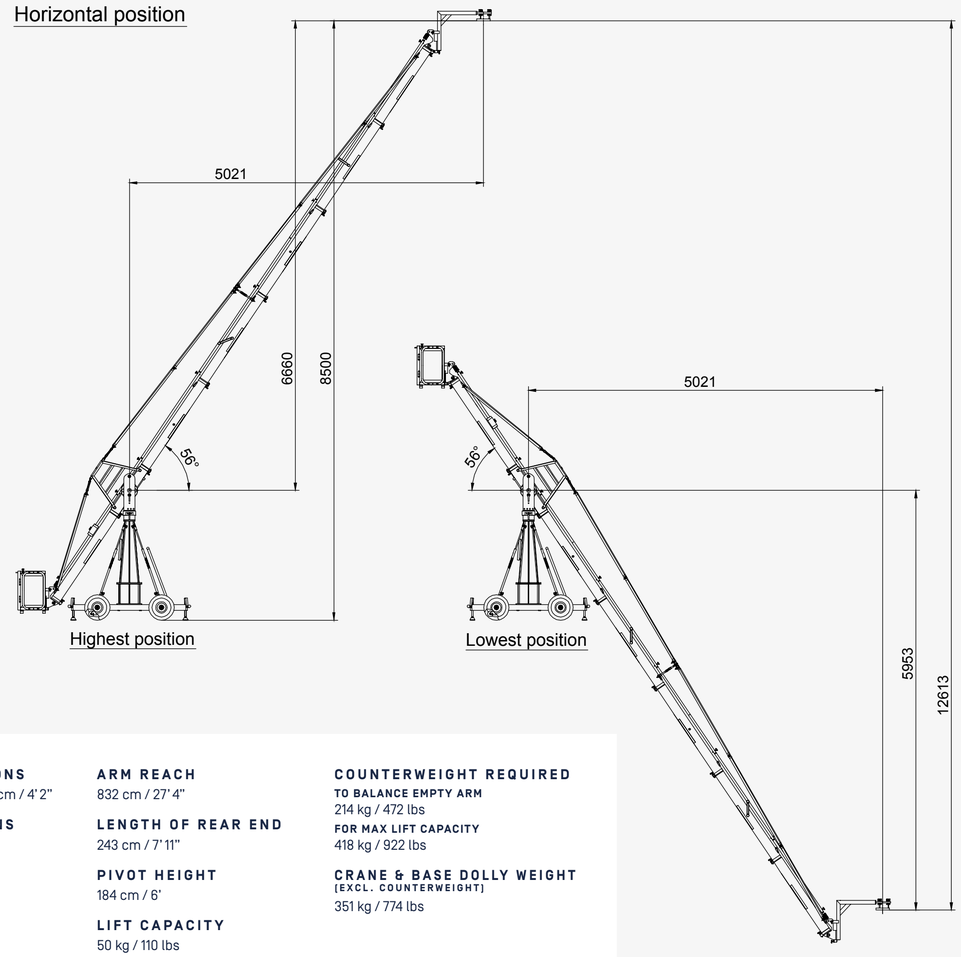

Highest position

Lowest position

FRONT EXTENSIONS
4 x 150 cm / 5' + 1 x 127 cm / 4' 2"

REAR EXTENSIONS
1 x 150 cm / 5'

MAX HEIGHT
850 cm / 27' 11"

LIFT RANGE
1261 cm / 41' 5"

ARM REACH
832 cm / 27' 4"

LENGTH OF REAR END
243 cm / 7' 11"

PIVOT HEIGHT
184 cm / 6'

LIFT CAPACITY
50 kg / 110 lbs

COUNTERWEIGHT REQUIRED
TO BALANCE EMPTY ARM
214 kg / 472 lbs
FOR MAX LIFT CAPACITY
418 kg / 922 lbs

CRANE & BASE DOLLY WEIGHT
(EXCL. COUNTERWEIGHT)
351 kg / 774 lbs

VERSION 18

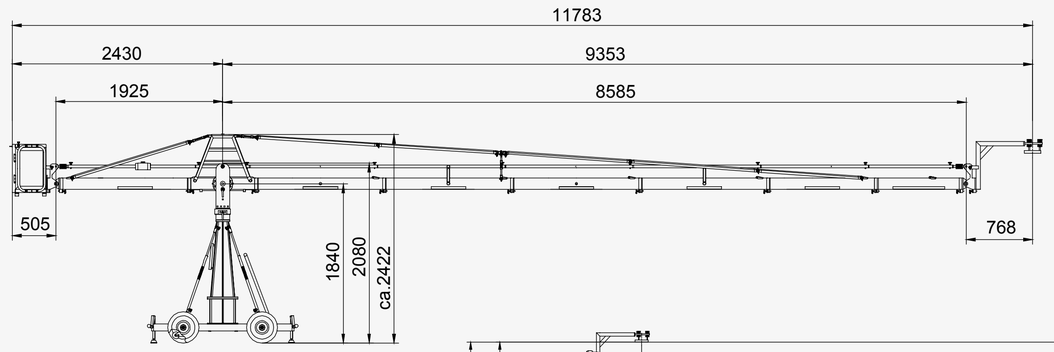

Horizontal position

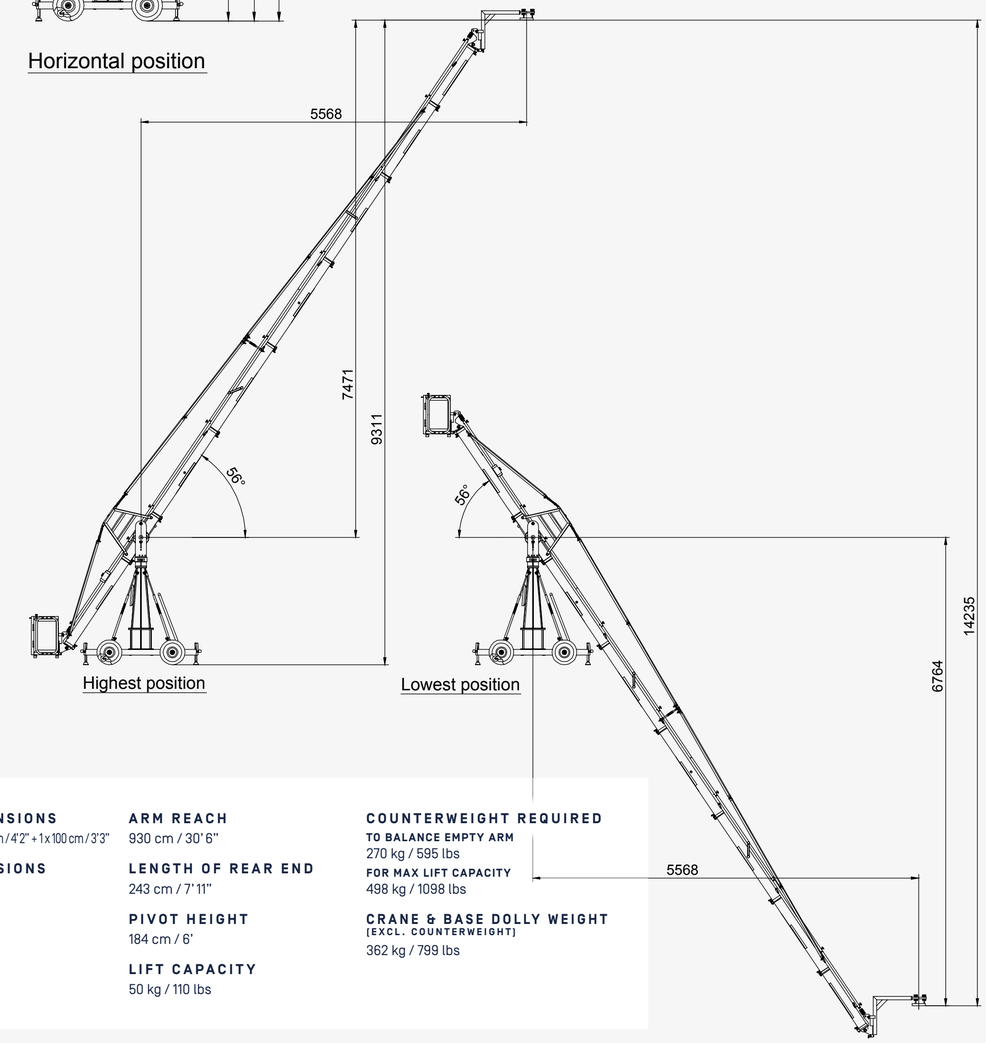

Highest position

Lowest position

FRONT EXTENSIONS
4 x 150 cm / 5' + 1 x 127 cm / 4' 2" + 1 x 100 cm / 3' 3"

REAR EXTENSIONS
1 x 150 cm / 5'

MAX HEIGHT
931 cm / 30' 7"

LIFT RANGE
1424 cm / 46' 8"

ARM REACH
930 cm / 30' 6"

LENGTH OF REAR END
243 cm / 7' 11"

PIVOT HEIGHT
184 cm / 6'

LIFT CAPACITY
50 kg / 110 lbs

COUNTERWEIGHT REQUIRED
TO BALANCE EMPTY ARM
270 kg / 595 lbs
FOR MAX LIFT CAPACITY
498 kg / 1098 lbs

CRANE & BASE DOLLY WEIGHT
(EXCL. COUNTERWEIGHT)
362 kg / 799 lbs

Measurements in mm, unless otherwise specified

Please note: *Technical specifications are subject to change without notice.*